8-channel 4K Network Video Recorder

1U 8-port PoE 4K and H.265 Lite Network Video Recorder



- H.265 and H.264 Video Compression
- Maximum 200 Mbps Incoming Bandwidth
- Up to 8 MP Resolution for Preview and Playback
- Simultaneous HDMI and VGA Video Output
- Support for IPC and UPnP Protocols
- Eight (8) PoE Ports
- Support for Automatic Network Replenishment (ANR) Technology



System Overview

Dahua's Lite Series network video recorders offer excellent performance and high recording quality for IP video surveillance applications. For applications where details are critical for identification, this professional NVR provides a powerful processor with up to 4K resolution. Additionally, the NVR features a mouse shortcut operation menu, remote management and control, center storage, edge storage, and back up storage.

Designed as a cost-effective and easy to install recorder, this NVR is an ideal addition to any security system that monitors public spaces, water conservancy, transportation, city centers, schools, and financial institutions.

The NVR is compatible with numerous third-party devices making it the perfect solution for surveillance systems with or without a video management system (VMS). Its open architecture supports multi-user access and it is compatible with ONVIF 2.4, enabling interoperability when combined with 4K cameras.

Functions

Dewarping Mode

The NVR has the ability to correct the distortion in a circular panoramic view produces by a fisheye lens. The NVR offers various dewarping modes for different installations and configurations.

4K Resolution

4K resolution is a revolutionary breakthrough in image processing technology. 4K delivers four times the resolution of Full HD 1080p devices and offers superior picture quality and image details. 4K resolution improves the clarity of a magnified scene to view or record crisp forensic video from large areas.

Intelligent Video System (IVS) Recording

Working with IVS-enabled IP cameras, the NVR recognizes and records video that contains IVS data on all IP channels. The NVR records standard intelligence at-the-edge features, as well as premium IVS features that detect abandoned or missing objects, Tripwire violations, and intrusion violations. The NVR is also capable of recording business analysis data – Facial Detection, People Counting, and Heat Map – from IP cameras with built-in Intelligent Business Analytics.

Heat Map

The Heat Map option highlights the areas with the highest concentration of people. This information can then be exported into a customized report to assist in business or forensic analysis.

Automatic Network Replenishment (ANR) Technology

Network Video Recorders with the ANR function automatically store video data on an IP camera SD card when the network is disconnected. After recovery of the network, the NVR automatically retrieves the video data stored on the camera.

Smart Add

The Smart Add function makes installing an IP surveillance system quick and easy. The NVR automatically detects and lists IP cameras connected to the same router as the NVR. This automatic detection makes adding cameras to the NVR a seamless process.

Technical Specification

System

Main Processor	Embedded Quad-core Processor
Operating System	Embedded Linux

Audio and Video

IP Camera Input	Eight (8) Channels
Two-way Talk	Input: One (1) Channel, RCA Output: One (1) Channel, RCA

Display

Interface	One (1) HDMI One (1) VGA
Resolution	3840 x 2160, 1920 x 1080, 1280 x 1024, 1280 x 720, 1024 x 768
Multi-screen Display	1/4/8/9
On-screen Display	Camera Title, Time, Video Loss, Camera Lock, Motion Detection, Recording

Recording

Compression	H.265, H.264, MJPEG
Resolution	8 MP, 6 MP, 5 MP, 4 MP, 3 MP, 1080p, 1.3 MP, 720p, D1, CIF,
Record Rate	200 Mbps
Bit Rate	16 Kbps to 20 Mbps per channel
Record Mode	Manual, Schedule (Regular, Continuous), Motion Detection (Video Detection, Motion Detection, Tampering, Video Loss), Stop
Record Interval	1 to 120 minutes (default: 60 minutes) Pre-record: 1 to 30 s Post-record: 10 to 300 s

Video Detection and Alarm

Trigger Events	Recording, PTZ, Tour, Alarm Out, Video Push, Email, FTP, Snapshot, Buzzer and Screen Tips
Video Detection	Motion Detection, MD Zones: 396 (22 x 18), Video Loss and Tampering
Alarm Input	Four (4) Channels, Low Level Effective, Green Terminal Interface
Relay Output	Two (2) Channels, NO/NC Programmable, Green Terminal Interface

Playback and Backup

Sync Playback	1/4/8
Search Mode	Time/Date, Alarm, MD and Exact Search (accurate to one second), Smart Search
Playback Function	Play, Pause, Stop, Rewind, Fast Play, Slow Play, Next File, Previous File, Next Camera, Previous Camera, Full Screen, Repeat, Shuffle, Backup Selection, Digital Zoom
Backup Mode	USB Device, Network

Third-party Support

Third-party Support	Dahua, Arecont Vision, AXIS, Bosch, Brickcom, Canon, CP Plus, Dynacolor, Honeywell, Panasonic, Pelco, Samsung, Sanyo, Sony, Videotec, Vivotek, and others

Network

Ethernet	One (1) RJ-45 Port (10/100/1000 Mbps)
PoE	Eight (8) Ports (IEEE802.3af/at)
Network Function	HTTP, HTTPs, TCP/IP, IPv4/IPv6, UPnP, RTSP, UDP, SMTP, NTP, DHCP, DNS, IP Filter, PPPoE, DDNS, FTP, Alarm Server, IP Search (Support for Dahua IP cameras, DVRs, NVS)
Maximum User Access	128 Users
Mobile Operating System	IOS, Android
Interoperability	ONVIF 2.4, CGI Conformant

Storage

Internal HDD	Two (2) SATA III Ports, Up to 6 TB capacity for each HDD
HDD Mode	Single

Auxiliary Interface

USB	One (1) USB 3.0 Port One (1) USB 2.0 Port

Electrical

Power Supply	100 VAC to 240 VAC, 50/60 Hz
Power Consumption	NVR: < 9.6 W, without HDD
Total PoE Power	25.5 W single port, 130 W total

Environmental

Operating Conditions	-10° C to +55° C (+14° F to +131° F)
Storage Conditions	-20° C to +70° C (-4° F to +158° F), 0 to 90% RH

Construction

Dimensions	1U, 375.0 mm x 327.50 mm x 53.0 mm (14.80 in. x 12.90 in. x 2.10 in.)
Net Weight	2.6 kg (5.73 lb), without HDD
Gross Weight	4.0 kg (8.82 lb), without HDD

Certifications

Safety	UL 60950-1 CAN/CSA C22.2 No.60960-1
Electromagnetic Compatibility (EMC)	FCC Part 15 Subpart B ANSI C63.4-2014

Intelligence

IVS triggers an alarm and takes a defined action for the following events:	
Standard Features	• Tampering with the camera. • Camera loses or changes focus drastically. • Error writing to an onboard Micro SD card. • Error sending or receiving data over the network. • Unauthorized access to the camera.
Premium Features	
Motion	An object moves through any part of the scene.
Tripwire	A target crosses a user-defined line.
Intrusion	A target enters or exits a defined perimeter.
Scene Change	A person or object moves the camera to change the scene or covers the camera to obscure the scene.
Abandoned/Missing Object	A target leaves an object in designated area, or a target removes an object from the same designated area.
Advanced Features (records data from IP cameras with Advanced Features)	
Facial Detection	Detects and captures a snapshot of a human face in a defined area within a scene.
People Counting	Measure the number of customers, visitors or passengers in a surveillance scene.
Heat Map	Generates a visual representation of data.

Ordering Information

Type	Part Number	Description
8-channel NVR	N42B2P	8-channel 1U 8 PoE 4K H.265 Lite Network Video Recorder

Dimensions (mm/in.)

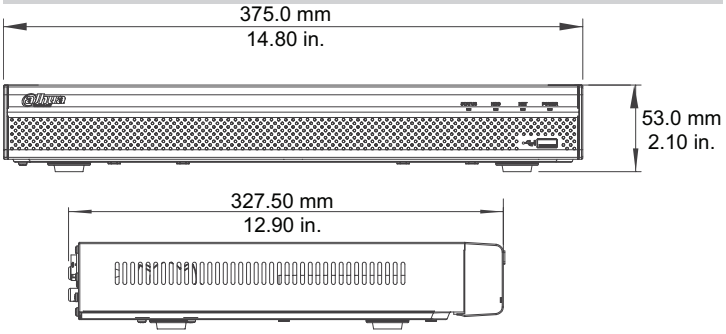

Rear Panel

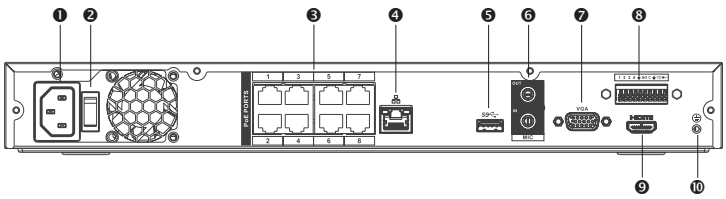

1	Power Input	6	Audio Input/Output
2	On/Off Button	7	VGA Output
3	PoE Ports (x8)	8	Alarm Input/Output
4	Ethernet Port (1000 Mbps)	9	HDMI Output
5	USB 2.0 Port	10	Ground

Rev 001.004 © 2017 Dahua. All rights reserved. Design and specifications are subject to change without notice