E SCOOTER

e-kick 5 en eKick 7

OPERATION MANUAL



Controleer a.u.b. bij de lokale autoriteiten of het gebruik van dit product op de openbare weg is toegestaan.

Please check with local authorities whether or not the use of this product on the public road is allowed.

S'il vous plaît vérifiez auprès des autorités locales si l'utilisation de ce produit sur la voie publique est autorisée.

HELMETS SAVE LIVES!

Always wear a properly fitted helmet that complies with CPSC or CE safety standards when you ride your bicycle.

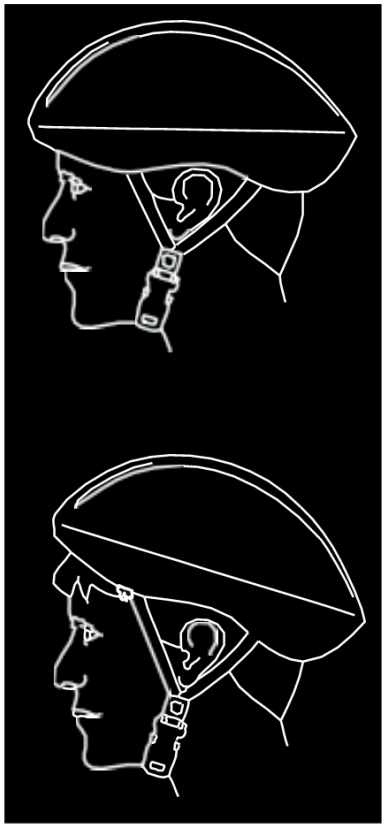

Correct Fitting: Make sure your helmet covers your forehead.

Incorrect Fitting: Forehead is exposed and vulnerable to serious injury.

⚠WARNING!

PLEASE READ THE USER MANUAL THOROUGHLY.

Failure to follow the basic instructions and safety precautions listed in the user manual can lead to damage to your device, other property damage, serious bodily injury, and even death.

Thank you for purchasing the E-Scooter. Please read all instructions carefully before using and retain this manual for future use and reference.

This manual applies to the E-Scooter

• In order to avoid dangers that are caused by collisions, falls, and loss of control, please learn how to ride the E-Scooter safely

• You can learn operating skills by reading the product manual and watching videos.

• This manual includes operating instructions and precautions, and users must read it carefully and follow the instructions.

• All users are responsible for any consequences caused by violating warning contents or prompt operations. can not be held liable.

ATTENTION

1. Use only the supplied charger with this scooter.
Charger Manufacturer: Shenzhen Gojusin Technology Co., LTD
Model: GJS150-0294200

2. The operating temperature range of the charger is 10-25° C.

3. The operating temperature range of the E-Scooter is 0-45° C.

4. Do not ride on icy or slippery surfaces.

5. Read the operation manual and warning labels before riding.

6. Store the E-Scooter in a dry, ventilated environment.

7. When transporting the E-Scooter, avoid violent crashes or impact.

LOW TEMPERATURE WARNING

Low temperature will affect the lubrication of moving parts inside the E-Scooter, increasing internal resistance. At the same time, in low temperatures, the discharge capacity and the capacity itself of the battery will be significantly decreased.

Use caution when riding the E-Scooter in cold temperatures (below 4.4°C).

Doing so may increase the risk of mechanical failures of the scooter, which may lead to damage to your device, other property damage, serious bodily injury and even death.

SAFETY INSTRUCTIONS

• Keep the device away from heat sources, direct sunlight, humidity, water and any other liquids.

• Do not operate the device if it has been exposed to water, moisture or any other liquids to prevent against electric shock, explosion and/or injury to yourself and damage to the device.

• Do not use the device if it has been dropped or damaged in any way.

• Repairs to electrical equipment should only be performed by the manufacturer. Improper repair voids the warranty and may place the user at serious risk.

• Do not puncture or harm the exterior surface of the product in any way.

• Keep the device free from dust, lint, etc.

• Do not use this device for anything other than its intended use or purpose. Doing so may damage the device or lead to property damage, injury or death.

• This product is not a toy. Keep out of reach of children.

• Do not expose batteries, battery pack, or batteries installed to excessive heat, such as direct sunlight, or open flame.

• Do not allow hands, feet, hair, body parts, clothing or similar articles to come in contact with moving parts, wheels or drive-train, while the engine is running.

• Do not operate, or allow others to operate, the scooter, until the user understands all instructions, warnings and safety features described in this manual.

• Check with your doctor if you have a medical condition that could affect your ability to use the E-Scooter.

• Persons with head, back or neck ailments or prior surgeries to those areas of the body are not recommended to use this E-Scooter.

• Persons with any mental or physical conditions that may make them susceptible to injury or impair their physical or mental capabilities to recognize, understand and perform all of the safety instructions and to be able to assume the hazards inherent in unit use, should not use the E-Scooter.

NOTES:

In this manual, the above symbol with the word "NOTES" indicates instructions or relevant facts the user should remember prior to using the device.

⚠ CAUTION!

In this manual, the above symbol with the word "CAUTION" indicates a hazardous situation which, if not avoided, can cause minor or moderate injury.

⚠WARNING!

In this manual, the above symbol with the word "WARNING" indicates a hazardous situation which, if not avoided, can cause death or serious injury.

SERIAL NUMBER

Please keep the serial number on file for warranty claims as well as proof of purchase.

INTRODUCTION

The E-Scooter is a personal transporter. Our technology and production processes are developed with strict testing for each E-Scooter. Operating the E-Scooter without following the contents of this manual may lead to damage to your E-Scooter, or bodily injury.

This manual is designed to give you the information you need for the safe operation and maintenance of your new E-Scooter. Please read it thoroughly before riding your E-Scooter.

PACKAGE CONTENTS

- Electric Folding Scooter
- Charging Cable
- Operation Manual

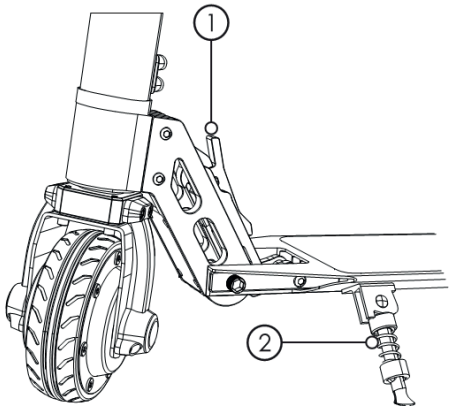

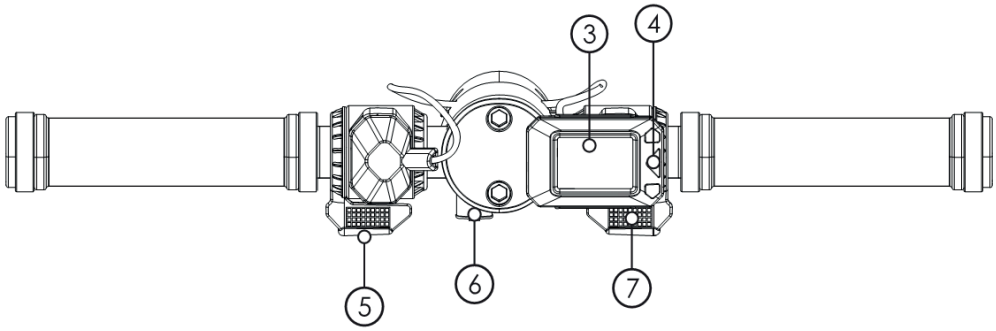

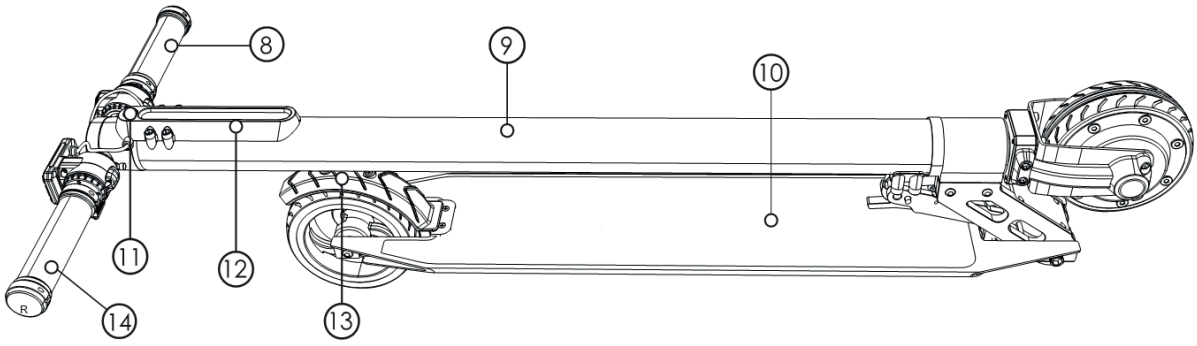

FEATURES/PARTS

1. Release Lever
2. Kickstand
3. LCD Display
4. Power/Function Button
5. Electric Brake
6. Charging Port
7. Throttle
8. Handlebars(L)
9. Aluminum Frame
10. Foot Pad
11. LED Power Button
12. LED Light
13. Mechanical Brake
14. Handlebars(R)

⚠ WARNING

Any E-Scooter that does not work properly can cause you to lose control and fall. Inspect the entire device thoroughly before every ride, and do not ride it until any problems have been corrected.

SPECIFICATIONS

Model:	eKick 5 and eKick7
Net Weight:	7.6 kg/eKick5, 9.5kg/eKick7
Max Supported Weight:	120 kg
Min Supported Weight:	20 kg
Max Speed:	Up to 22 km/h
Max Distance Range:	Up to 10 km
Minimum Turning Radius:	0°
Battery Type:	Lithium
Motor Power:	Brushless Motor
Battery Voltage:	25.2 V
Battery Capacity:	4.0 Ah
Power Requirement:	AC 100-240V, 50-60 Hz
Folding Size:	eki ck5:103cm x 42cm x 22.5cm ekick7:108cm x 43cm x 28cm
Open Size:	ekick5:103cm x 42cm x 91cm ekick7:97cm x 43cm x 108cm
Tire Type:	Non-pneumatic Solid Tires
Tire Size :	5Inches (12.7cm) ,6.5Inches (16.51cm)
Brake Type:	Electronic & Mechanical Brakes

PREPARING YOUR E-SCOOTER

PLEASE READ THE FOLLOWING INSTRUCTIONS CAREFULLY

ATTACHING THE HANDLEBARS

Attach the handle bars by placing them into the appropriate sockets and twisting them in the correct direction.



NOTE: If the handlebars do not attach flush to the frame, you may need to shift the location of your throttle and brake assembly appropriately.

Tighten or loosen the throttle and brake assembly with the included hex key and make sure they are NOT touching or blocking your handlebars.

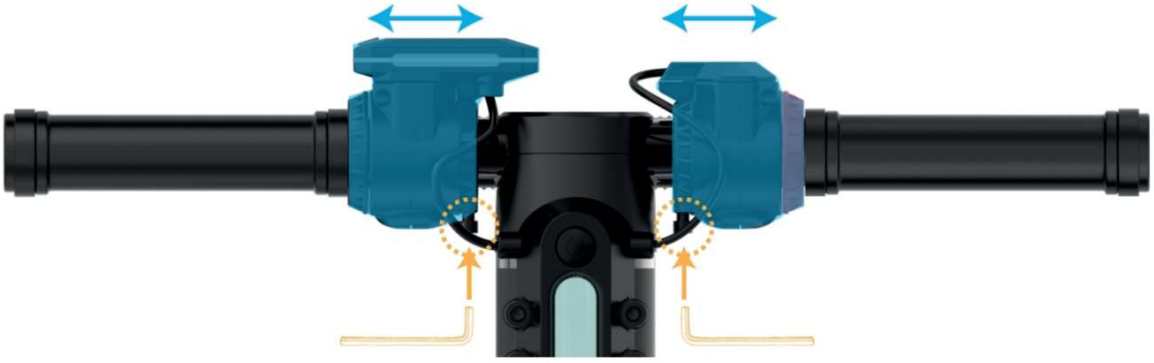

FOLDING & UNFOLDING YOUR E-SCOOTER.

Pull and hold the release lever, near the front of the foot pad, and lift the handlebars up to unfold or pull them down to fold. You will hear a click sound in both directions, this means it's now locked in place.

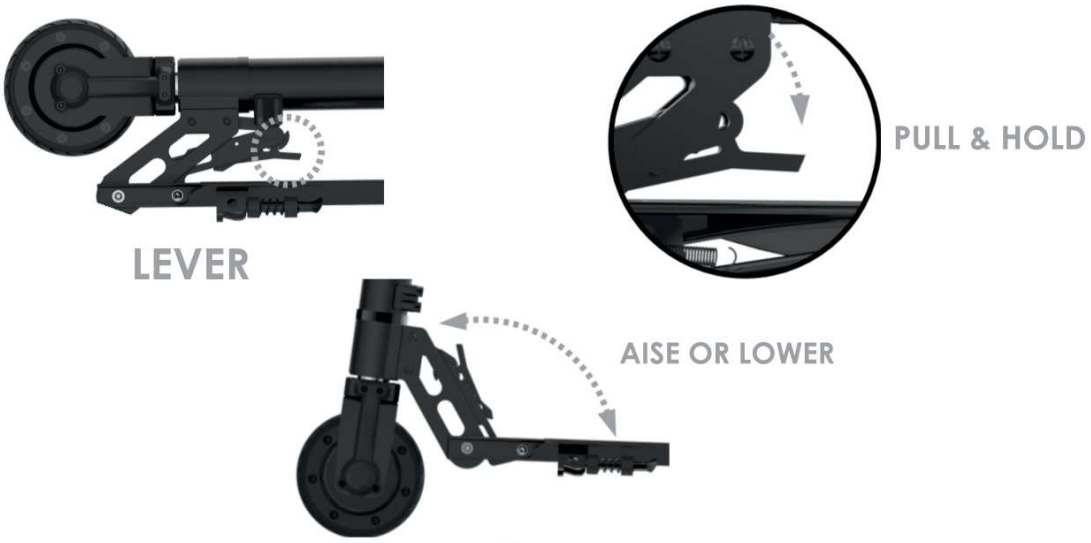

CONTROLS AND DISPLAY

LCD DISPLAY

Familiarize yourself with the LCD display of E-Scooter. If the readout of the LCD display of your E-Scooter is faded and unclear, you may need to recharge your device.

SPEED INDICATOR

Displays your current speed in km/h.

SPEED LEVEL INDICATOR

Displays your current speed level.

BATTERY LIFE INDICATOR

Displays your remaining battery life.

INFORMATION PANEL

Displays total mileage, current trip distance, voltage, and current trip time.

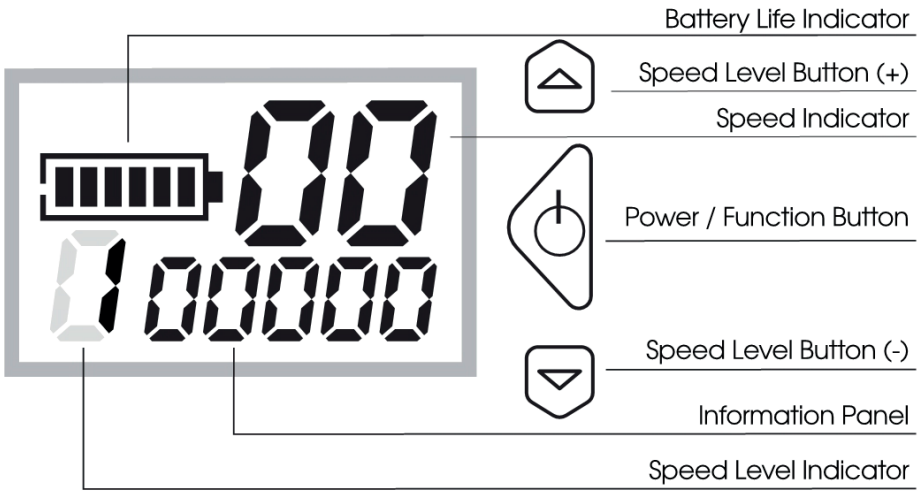

SPEED LEVEL BUTTON (+)

Press to increase top speed and acceleration.
0 – None, 1 – Low, 2 – Medium, 3 – High

POWER / FUNCTION BUTTON

Power ON Scooter - Press and hold for 3 seconds.
Power OFF Scooter - Press and hold for 3 seconds.
Cycle through total mileage, current trip distance, voltage, and current trip time.

SPEED LEVEL BUTTON (-)

Press to decrease top speed and acceleration.
0 – None, 1 – Low, 2 – Medium, 3 – High

CHARGING YOUR E-SCOOTER

CHARGING THE DEVICE

• Ensure that the charging port is clean and dry.
• Make sure that there is no dust, debris or dirt inside the port.
• Plug the charger into a grounded wall outlet.
• Connect the cable with the power supply (100V ~ 240V; 50, 60 Hz).
• Align and connect the 1-pin charging cable into the charging port of the E-Scooter. DO NOT FORCE OR BEND THE CHARGING CABLE INTO THE CHARGING PORT, AS IT MAY CAUSE THE PRONGS TO BEND OR BREAK.
• The charging indicator light should change to RED, indicating that your device is now being charged.
• When the RED indicator light on your charger turns to GREEN, then your device is fully charged.
• A full charge may take up to 2.5 hours.
• After fully charging your E-Scooter, unplug the charger from your device and from the power outlet.

BATTERY CARE / MAINTENANCE

BATTERY SPECIFICATIONS

Battery Type: Rechargeable lithium-ion battery
Charge Time: Up to 2.5 hours
Voltage: 25.2V
Initial Capacity: 4.0 AH
Working Temperature: 0-45° C
Charging Temperature:10-25° C
Storage Time: 1 year
Storage Temperature:-15~25° C
Storage Humidity: 5% - 95%

BATTERY MAINTENANCE

The lithium-ion battery is built into the device. Do not disassemble the device to remove the battery or attempt to separate it from the device.

CARE & MAINTENANCE

• Do not expose the device to liquid, moisture, or humidity to avoid damage to the product's internal circuitry.

• Do not use abrasive cleaning solvents to clean the device.

• Do not expose the device to extremely high or low temperatures as this will shorten the life of the electronic device, destroy the battery, and/or distort certain plastic parts.

• Do not dispose of the device in fire as it may explode or combust.

• Do not expose the device to contact with sharp objects as this will cause scratches and damage.

• Do not let the device fall from high places, as doing so may damage the internal circuitry.

• Do not attempt to disassemble the device.

• Use only the charger provided .

⚠ WARNING

Avoid using water or other liquids for cleaning. If water or other liquids enter the E-Scooter, it will cause permanent damage to the internal components.

⚠ WARNING

Users who disassemble the E-Scooter scooter without permission will void the warranty.