

User's Manual

DESKTOP

Content

Copyright Notice 1-4
Trademarks 1-4
Revision History 1-4
FCC-B Radio Frequency Interference Statement 1-5
FCC Conditions 1-5
CE Conformity 1-5
Battery Regulations 1-6
WEEE Statement 1-6
Chemical Substances Information 1-6
RoHS Statement 1-7
Japan JIS C 0950 Material Declaration 1-7
India RoHS 1-7
Turkey EEE regulation 1-7
Ukraine restriction of hazardous substances 1-7
Vietnam RoHS 1-7
Upgrade and Warranty 1-8
Acquisition of Replaceable Parts 1-8
Safety Instructions 1-9

Introductions 2-1
Unpacking 2-2
Product Overview 2-3
Top Side View 2-3
Rear Side View 2-4
Front Side View 2-6
Bottom Side View 2-8
Specifications 2-9

How to Get Started 3-1
How to Secure the Desktop Vertically 3-2
How to Set Up a Power Plan in Windows 10 3-3
Choose or Customize a Power Plan 3-3
Create Your Own Power Plan 3-6
How to Connect the Internet 3-8
Wireless LAN 3-8
Wired LAN 3-10

How to Set Up Bluetooth Connection 3-15
Activating Bluetooth Connection 3-15

Copyright Notice

The material in this document is the intellectual property of Micro-Star International Co., Ltd. We take every care in the preparation of this document, but no guarantee is given as to the correctness of its contents. Our products are under continual improvement and we reserve the right to make changes without notice.

Trademarks

All trademarks are the properties of their respective owners.

Revision History

- Version: 1.0
- Date: 08, 2017

FCC-B Radio Frequency Interference Statement

This equipment has been tested and found to comply with the limits for a Class B digital device, pursuant to part 15 of the FCC rules. These limits are designed to provide reasonable protection against harmful interference in a residential installation. This equipment generates, uses and radiates radio frequency energy, and, if not installed and used in accordance with the instructions, may cause harmful interference to radio communications. However, there is no guarantee that interference will not occur in a particular installation. If this equipment does cause harmful interference to radio or television reception, which can be determined by turning the equipment off and on, the user is encouraged to try to correct the interference by one or more of the following measures:

- Reorient or relocate the receiving antenna.
- Increase the separation between the equipment and receiver.
- Connect the equipment into an outlet on a circuit different from that to which the receiver is connected.

NOTE

- The changes or modifications not expressly approved by the party responsible for compliance could void the user's authority to operate the equipment.
- Shield interface cables and AC power cord, if any, must be used in order to comply with the emission limits.

FCC Conditions

This device complies with part 15 of the FCC Rules. Operation is subject to the following two conditions:

- This device may not cause harmful interference.
- This device must accept any interference received, including interference that may cause undesired operation.

CE Conformity

CE

This device is in compliance with the essential safety requirements and other relevant provisions set out in the European Directive.

Battery Regulations



European Union: Batteries, battery packs, and accumulators should not be disposed of as unsorted household waste. Please use the public collection system to return, recycle, or treat them in compliance with the local regulations.



Taiwan: For better environmental protection, waste batteries should be collected separately for recycling or special disposal.

California, USA: The button cell battery may contain perchlorate material and requires special handling when recycled or disposed of in California.

For further information please visit: http://www.dtsc.ca.gov/hazardouswaste/perchlorate/

Safety Guideline for Using Lithium Battery

Danger of explosion if battery is incorrectly replaced. Replace only with the same or equivalent type recommended by the equipment manufacturer. Discard used batteries according to manufacturer's instructions.

WEEE Statement



European Union: Under the European Union ("EU") Directive on Waste Electrical and Electronic Equipment, Directive 2002/96/EC, which takes effect on August 13, 2005, products of "electrical and electronic equipment" cannot be discarded as municipal waste anymore and manufacturers of covered electronic equipment will be obligated to take back such products at the end of their useful life.

Chemical Substances Information

In compliance with chemical substances regulations, such as the EU REACH Regulation (Regulation EC No. 1907/2006 of the European Parliament and the Council), MSI provides the information of chemical substances in products at:

http://www.msi.com/html/popup/csr/evmtprtt_pcm.html

RoHS Statement

Japan JIS C 0950 Material Declaration

A Japanese regulatory requirement, defined by specification JIS C 0950, mandates that manufacturers provide material declarations for certain categories of electronic products offered for sale after July 1, 2006.

http://www.msi.com/html/popup/csr/cemm_jp.html

http://tw.msi.com/html/popup/csr_tw/cemm_jp.html

India RoHS

This product complies with the "India E-waste (Management and Handling) Rule 2011" and prohibits use of lead, mercury, hexavalent chromium, polybrominated biphenyls or polybrominated diphenyl ethers in concentrations exceeding 0.1 weight % and 0.01 weight % for cadmium, except for the exemptions set in Schedule 2 of the Rule.

Turkey EEE regulation

Conforms to the EEE Regulations of the Republic Of Turkey.

Ukraine restriction of hazardous substances

The equipment complies with requirements of the Technical Regulation, approved by the Resolution of Cabinet of Ministry of Ukraine as of December 3, 2008 № 1057, in terms of restrictions for the use of certain dangerous substances in electrical and electronic equipment.

Vietnam RoHS

As from December 1, 2012, all products manufactured by MSI comply with Circular 30/2011/TT-BCT temporarily regulating the permitted limits for a number of hazardous substances in electronic and electric products.

Upgrade and Warranty

Please note that certain components, such as memory modules, HDD, SSD, ODD, and Bluetooth/WiFi combo card, etc., preinstalled in the product may be upgradable or replaceable by user's request depending on the models users purchased.

For any further information on the product users purchased, please contact the local dealer. Do not attempt to upgrade or replace any component of the product if users do not understand the component location or how to assembly/disassembly, since it may cause the product damaged. It is recommended that user contact the authorized dealer or service center for product service.

Acquisition of Replaceable Parts

Please be noticed that the acquisition of replaceable parts (or compatible ones) of the product users purchased in certain countries or territories may be fulfilled by the manufacturer within 5 years at most since the product has been discontinued, depending on the official regulations declared at the time. Please contact the manufacturer via http://www.msi.com/support/ for the detailed information about the acquisition of spare parts.

Safety Instructions



Read the safety instructions carefully and thoroughly. All cautions and warnings on the equipment or user's manual should be noted.



Keep the equipment away from humidity and high temperature.



Do not cover the ventilators of the equipment to prevent the equipment from overheating.



- Do not leave the equipment in an unconditioned environment with a storage temperature above 60ºC (140ºF) or below 0ºC (32ºF), which may damage the equipment.
- This equipment should be operated under maximum ambient temperature of 35ºC (95ºF).



Place the power cord in a way that people are unlikely to step on it. Do not place anything on top of the power cord.



Always keep the strong magnetic or electrical objects away from the equipment.



Never pour liquid into the opening that could damage the equipment or cause an electrical shock.

If any of the following situations arises, get the equipment checked by a service personnel:



- The power cord or plug is damaged.
- Liquid has penetrated into the equipment.
- The equipment has been exposed to moisture.
- The equipment has not worked well or you can not get it work according to User's Manual.
- The equipment was dropped and damaged.
- The equipment has obvious signs of breakage.

Green Product Features

- Reduced energy consumption during use and stand-by
- Limited use of substances harmful to the environment and health
- Easily dismantled and recycled
- Reduced use of natural resources by encouraging recycling
- Extended product lifetime through easy upgrades
- Reduced solid waste production through take-back policy



Environmental Policy

- The product has been designed to enable proper reuse of parts and recycling and should not be thrown away at its end of life.
- Users should contact the local authorized point of collection for recycling and disposing of their end-of-life products.
- Visit the MSI website and locate a nearby distributor for further recycling information.
- Users may also reach us at gpcontdev@msi.com for information regarding proper disposal, take-back, recycling, and disassembly of MSI products.

Introductions

User's Manual
DESKTOP

Congratulations on becoming an user of this equipment, the finely designed equipment. You will have a delightful and professional experience in using this exquisite equipment. We are proud to tell users that this equipment is thoroughly tested and certified by our reputation for unsurpassed dependability and customer satisfaction.

Unpacking

First, unpack the shipping carton and check all items carefully. If any item contained is damaged or missing, please contact your local dealer immediately. Also, keep the box and packing materials in case you need to ship the unit in the future. The package should contain the following items:

- The Equipment
- Quick Start Guide
- AC/DC adapter and AC power cord
- Optional all-in-one application disk, containing the full version of user's manual, drivers, utilities, and so on.

Product Overview

This section provides the description of basic aspects of the equipment. It will help you to know more about the appearance of this equipment before using it. Please be aware that the figures shown here are for reference only.

Top Side View

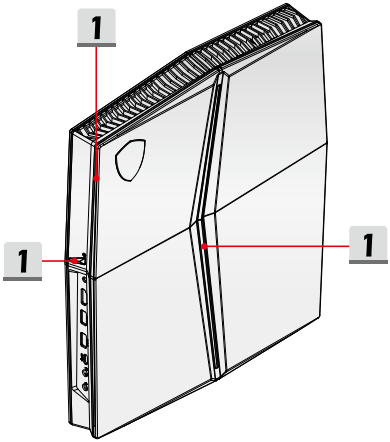

1. **Light Bars/ Power LED**
   The illuminated activity can be adjusted by the MSI Dragon Center software. Refer to the Notebook Software Application Manual for details.

Rear Side View

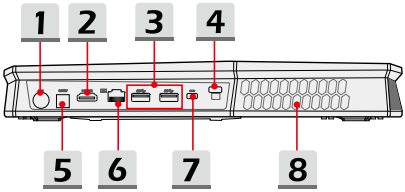

1. **Power Connector**
   This connector is to connect the AC/DC adapter and supply power for the equipment.

2. **HDMI Connector**
   HDMI (High-Definition Multimedia Interface) technology is the industry-leading interface and de-facto standard connecting high-definition (HD) and ultra high-definition (UHD) equipment.

3. **USB 3.0 Port**
   USB 3.0, the SuperSpeed USB, delivers the higher interface speeds for connecting various devices, such as storage devices, hard drives, or video cameras, and offers more advantages over high-speed data transferring.

4. **USB 3.1 Port (Type C)**
   USB 3.1, the SuperSpeed+ USB, delivers the higher interface speeds for connecting various devices, such as storage devices, hard drives, or video cameras, and offers more advantages over high-speed data transferring.
   The slim and sleek USB Type C connector features reversible plug orientation and cable direction, and supports scalable performance to future-proof solution, including USB 3.x, DisplayPort, PCIe, Audio, and Thunderbolt 3 (Optional).

5. **S/PDIF-Out**
   This S/PDIF connector is provided for digital audio transmission to external speakers through an optical fiber cable.

6. **RJ-45 Connector**
   The Ethernet connector, with optionally supported transmitting rate of 10/100/1000 megabits per second, is used to connect a LAN cable for network connection.

7. **Kensington Lock**
   This equipment provides a Kensington lock hole, which allows users to secure the equipment in place.

8. **Ventilator**
   The ventilator is designed to cool the system. DO NOT block the ventilator for air circulation.

Front Side View

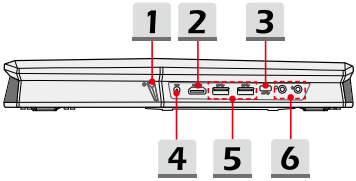

1. Power Button / Power LED

Power

Power Button

- Use this button to turn the equipment power ON and OFF.
- Use this button to awake the equipment from the sleep state.
- Note: The equipment can also be awakened by any mouse or keyboard activity.

Power LED

- LED glows when the equipment power is turned on.
- LED goes off when the equipment is turned off.

2. HDMI Connector

HDMI (High-Definition Multimedia Interface) technology is the industry-leading interface and de-facto standard connecting high-definition (HD) and ultra high-definition (UHD) equipment.

3. USB 3.0 Port (Type C)

USB 3.0, the SuperSpeed USB, delivers the higher interface speeds for connecting various devices, such as storage devices, hard drives, or video cameras, and offers more advantages over high-speed data transferring.
The slim and sleek USB Type C connector features reversible plug orientation and cable direction, and supports scalable performance to future-proof solution, including USB 3.x, DisplayPort, PCIe, Audio, and optionally supported Thunderbolt 3.

4. **Power Connector**
   This connector is to supply power for your VR headset.

5. **USB 3.0 Port**
   USB 3.0, the SuperSpeed USB, delivers the higher interface speeds for connecting various devices, such as storage devices, hard drives, or video cameras, and offers more advantages over high-speed data transferring.

6. **Audio Port Connectors**
   Make high quality sound blaster with stereo system and Hi-Fi function supported.

	**Headphone** A connector for speakers or headphones.
	**Microphone** Used for an external microphone.

Bottom Side View

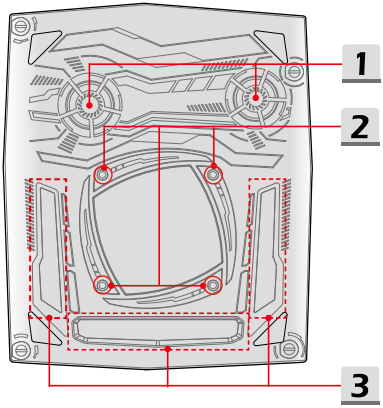

1. **Ventilator**
   The ventilator is designed to cool the system. DO NOT block the ventilator for air circulation.

2. **Mounting Holes**
   The VESA mounting holes are used to attach a mounting plate. It is necessary to secure the optional mounting plate to a concrete block wall.

3. **Air Inlet**
   The air inlet allows for fresh air to enter the system. DO NOT block the air inlet for air circulation.

Specifications

The specifications listed here is reference only, and may change without notice. The actual products sold are different from areas.

Visit MSI official website at www.msi.com, or contact the local retailers to learn the correct specifications of the product user purchased.

Physical Characteristic	
Dimension	279 x 331 x 43 mm
Volume	2.5 Liter
Weight	Up to 2.5 kg
CPU	
Package	LGA1151
CPU Processor Type	Intel® processor
Core Chip	
PCH	Intel® chipset
Memory	
Technology	DDR4, 2400
Memory	DDR4 SO-DIMM slots x 4
Maximum	Up to 64GB
Power	
AC/DC Adapter (1) (optional)	230W, 19.5V Input: 100~240V, 50~60Hz Output: 19.5V ⎓ 11.8A
AC/DC Adapter (2) (optional)	330W, 19.5V Input: 100~240V, 50~60Hz Output: 19.5V ⎓ 16.9A
RTC Battery	Yes
Power Connector	x1, AC/DC in x1, 12V DC out

Memory	
HDD form factor	x 1, 2.5" HDD
SSD	x 2, M.2 SSD, SATA/ PCIE combo
Special Note	To obtain further and correct information about the optionally supported SSD modeules, please contact the local retailer. Be noted, the warranty of the equipment may be void if the SSD modules were not replaced by an authorized service center.
I/O Port	
USB	x 2 (USB 3.1/3.0 Type C) x 4 (USB 3.0)
Thunderbolt™ 3 (optional)	x 1 • USB 3.1, Type-C interface, 4K output supported. • Up to 5V/3A portable charging power optionally supported when AC power is connected.
S/PDIF-out	x 1
Mic-in	x 1
Headphone-out	x 1
RJ45	x 1
HDMI	x 2
Kensington Lock	x 1
Communication Port	
LAN	Supported
Wireless LAN	Supported
Bluetooth	Supported
Video	
Graphics	• NVIDIA® GeForce® discrete graphics • Virtual Reality optionally supported
VRAM	GDDR5, based on GPU structure

Security	
	TPM 2.0 is a hardware-based encryption device that collaborates with software measures to form a more advanced and secure data protection.
Trusted Platform Module (optional)	TPM functionalities can be de/activated in BIOS settings where appropriate.
	With professional versions of Windows, BitLocker is the default console available for TPM communications serving data encryption purposes.

Note: Do not disassemble the equipment while it is in use or is connected to an electrical outlet.

How to Get Started

User's Manual
DESKTOP

How to Secure the Desktop Vertically

The package comes with a vertical desktop stand that is a perfect fit for the compact gaming desktop. Please follow the image below for secure installation.

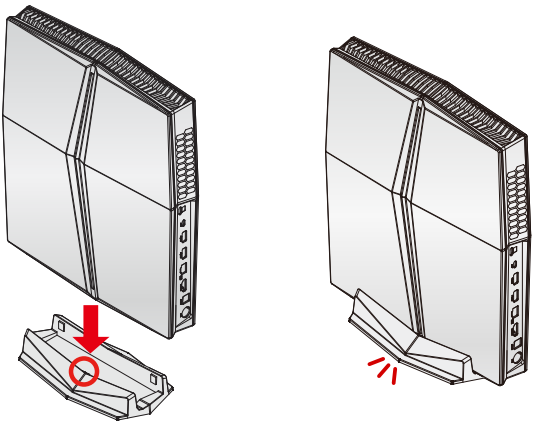

How to Set Up a Power Plan in Windows 10

A power plan is a collection of hardware and system settings that manages how your computer uses and conserves power. Power plans can save energy, maximize system performance, or balance energy conservation with performance. The default power plans — Balanced and Power saver — meet most people's needs. But you can modify settings for existing plans or create your own plan.

Choose or Customize a Power Plan

1. Find [Windows] icon in the lower-left corner of the screen. Right click it to unfold the selection menu. Select [Power Options] within the menu.
2. Select [Additional power settings] under [Related settings].
3. Choose a Power Plan by left clicking on one of the selections from the Power Plan list. The Power Plan of [Balanced] is selected as an example here. Click on the [Change plan settings] to the right of the power plan to customize a power plan.
4. Choose the sleep and display settings you want your computer to use. Click on [Change advanced power settings] to make changes to the selected power plan settings to meet your needs.
5. To restore the selected Power Plan back to its default settings, click on [Restore plan defaults] and then click [Yes] to confirm.
6. Click [OK] to finish.

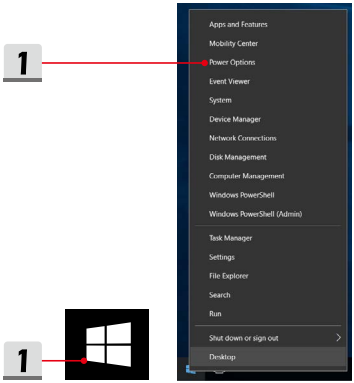
1
Apps and Features
Mobility Center
Power Options
Event Viewer
System
Device Manager
Network Connections
Disk Management
Computer Management
Windows PowerShell
Windows PowerShell (Admin)
Task Manager
Settings
File Explorer
Search
Run
Shut down or sign out
Desktop
1

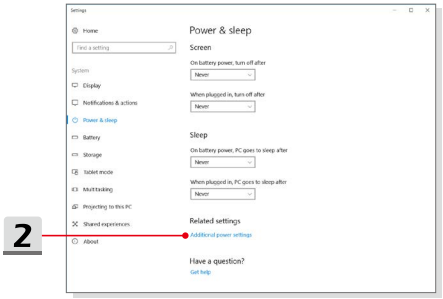
Settings
Home
Find a setting
System
Display
Notifications & actions
Power & sleep
Battery
Storage
Tablet mode
Multitasking
Projecting to this PC
Shared experiences
About
Power & sleep
Screen
On battery power, turn off after
Never
When plugged in, turn off after
Never
Sleep
On battery power, PC goes to sleep after
Never
When plugged in, PC goes to sleep after
Never
Related settings
Additional power settings
Have a question?
Get help
2

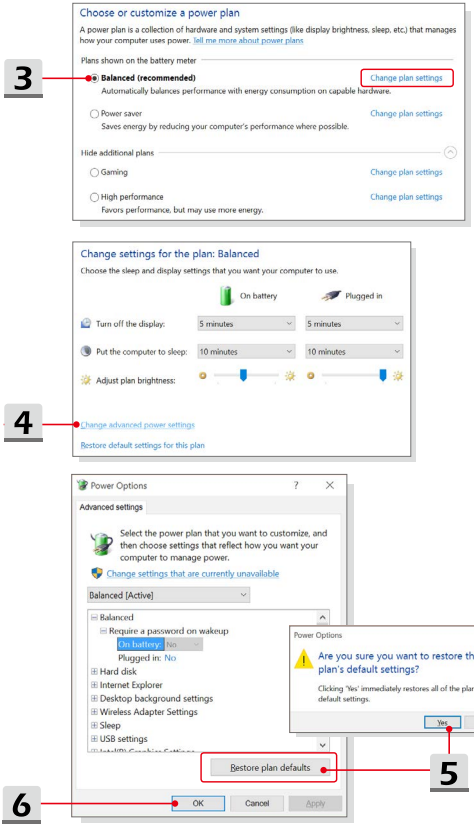
Choose or customize a power plan
A power plan is a collection of hardware and system settings (like display brightness, sleep, etc.) that manages how your computer uses power. Tell me more about power plans
Plans shown on the battery meter
Balanced (recommended)
Automatically balances performance with energy consumption on capable hardware.
Change plan settings
Power saver
Saves energy by reducing your computer's performance where possible.
Change plan settings
Hide additional plans
Gaming
Change plan settings
High performance
Favors performance, but may use more energy.
Change plan settings
3
Change settings for the plan: Balanced
Choose the sleep and display settings that you want your computer to use.
On battery
Plugged in
Turn off the display:
5 minutes
5 minutes
Put the computer to sleep:
10 minutes
10 minutes
Adjust plan brightness:
Change advanced power settings
Restore default settings for this plan
4
Power Options
Advanced settings
Select the power plan that you want to customize, and then choose settings that reflect how you want your computer to manage power.
Change settings that are currently unavailable
Balanced [Active]
Balanced
Require a password on wakeup
On battery: No
Plugged in: No
Hard disk
Internet Explorer
Desktop background settings
Wireless Adapter Settings
Sleep
USB settings
Restore plan defaults
OK
Cancel
Apply
6
Power Options
Are you sure you want to restore this plan's default settings?
Clicking 'Yes' immediately restores all of the plan's default settings.
Yes
No
5

Create Your Own Power Plan

You can create your own power plan and customize it as your requirement.

Please refer to the section of System Control Manager (SCM) in the Notebook Software Application Manual for details.

1. Select Power Options in the menu. Click [Create a power plan] in the left pane.
2. Select an existing plan that meet your needs most, and give the plan a name. Click [Next] to continue.
3. Change the settings for the new power plan. Click [Create] to make the customized power plan taking effect.
4. Now you have a new power plan that is automatically set as active.

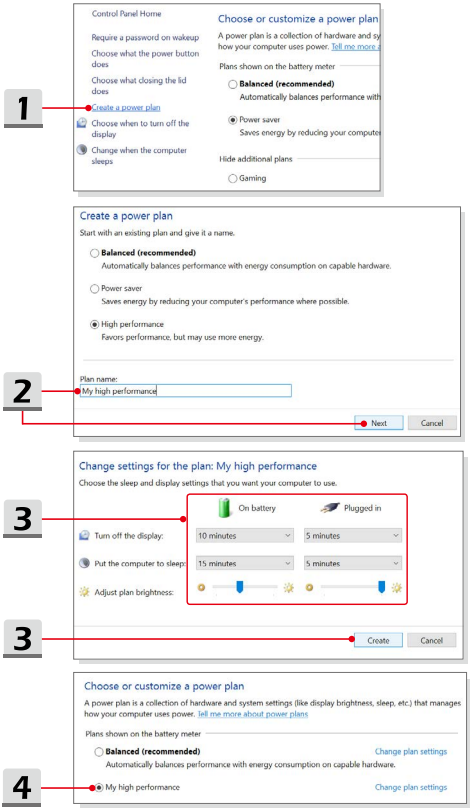
1
Control Panel Home
Require a password on wakeup
Choose what the power button does
Choose what closing the lid does
Create a power plan
Choose when to turn off the display
Change when the computer sleeps
Choose or customize a power plan
A power plan is a collection of hardware and sy
how your computer uses power. Tell me more a
Plans shown on the battery meter
Balanced (recommended)
Automatically balances performance with
Power saver
Saves energy by reducing your compute
Hide additional plans
Gaming
Create a power plan
Start with an existing plan and give it a name.
Balanced (recommended)
Automatically balances performance with energy consumption on capable hardware.
Power saver
Saves energy by reducing your computer's performance where possible.
High performance
Favors performance, but may use more energy.
2
Plan name:
My high performance
Next
Cancel
Change settings for the plan: My high performance
Choose the sleep and display settings that you want your computer to use.
3
On battery
Plugged in
Turn off the display:
10 minutes
5 minutes
Put the computer to sleep:
15 minutes
5 minutes
Adjust plan brightness:
3
Create
Cancel
Choose or customize a power plan
A power plan is a collection of hardware and system settings (like display brightness, sleep, etc.) that manages how your computer uses power. Tell me more about power plans
Plans shown on the battery meter
Balanced (recommended)
Change plan settings
Automatically balances performance with energy consumption on capable hardware.
4
My high performance
Change plan settings

How to Connect the Internet

Wireless LAN

Wireless LAN is a wireless broadband connection that allows you to connect to the Internet without using any cables. Follow the instructions below to set up a Wireless LAN connection.

- Wireless LAN Connection

1. Go to the desktop. Find the icon in the lower-right corner of the task bar and click on it to unfold the settings menu.
2. There are [Wi-Fi] and [Airplane mode] two options in the Network settings, select [Wi-Fi] here.
3. Choose one Wireless LAN connection from the network list to connect to the Internet. Click [Connect] to continue.
4. A security key may be required for connecting the selected network. Then click [Next].

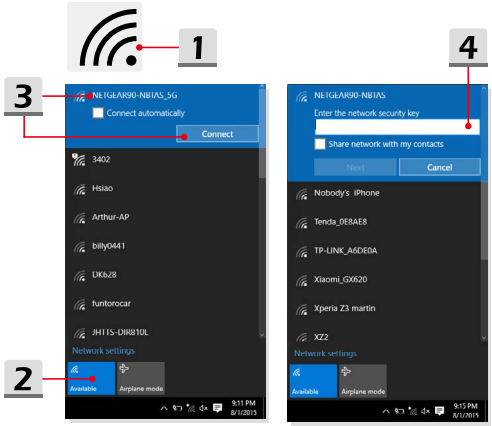

- Check the Wireless LAN status
  When Airplane mode is enabled, Wireless LAN connection will be turned off. Before setting up a Wireless LAN connection, make sure that Airplane mode is turned off.

  1. Go to the desktop. Find the icon in the lower-right corner of the task bar and click on it to unfold the settings menu.
  2. Check if Wireless LAN mode is available in the Network settings.
  3. Or, find the [SCM] icon in the lower-right corner of the task bar and click on it to bring out the main window of System Control Manager, please check if Wireless LAN mode is turned on.

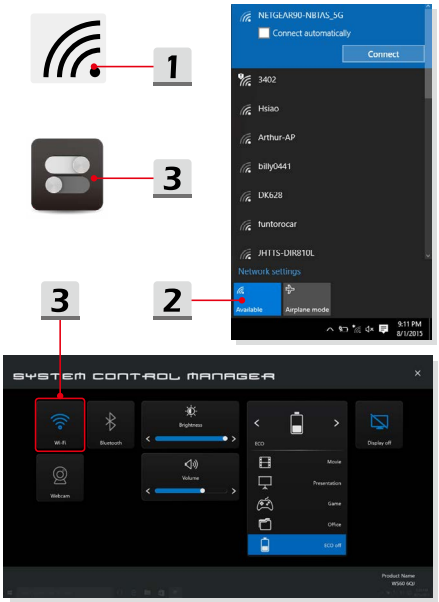

Wired LAN

Using cables and network adapters to connect to the Internet. Before setting up the connection of Dynamic IP/PPPoE or Broadband (PPPoE) or Static IP, contact your Internet Service Provider (ISP) or network administrator for assistance of setting up Internet connection.

- Dynamic IP/PPPoE Connection

1. Go to the desktop. Find the icon in the lower-right corner of the task bar, and then right click on it to select [Open Network and Sharing Center].
2. Choose [Change adapter settings].
3. Right click on [Ethernet] to select [Properties] from the drop-down menu.
4. In the Ethernet Properties window, select [Networking] tab and check [Internet Protocol Version 4 (TCP/IPv4)]. Then click [Properties] to continue.
5. Select [General] tab, click [Obtain an IP address automatically] and [Obtain DNS server address automatically]. Then click [OK].

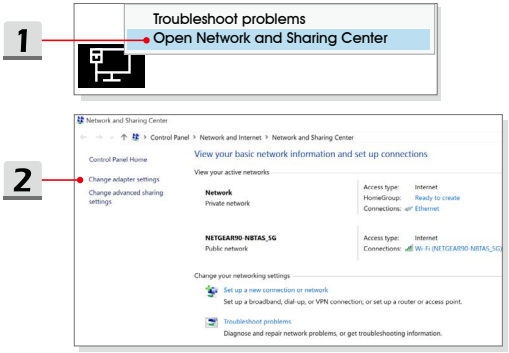

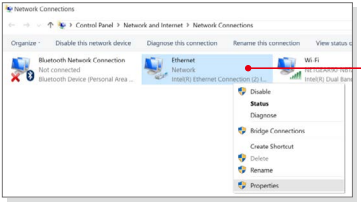
Network Connections
Control Panel > Network and Internet > Network Connections
Organize
Disable this network device
Diagnose this connection
Rename this connection
View status
Bluetooth Network Connection
Not connected
Bluetooth Device (Personal Area ...
Ethernet
Network
Intel(R) Ethernet Connection (2) I...
Wi-Fi
Intel(R) Dual Band
Disable
Status
Diagnose
Bridge Connections
Create Shortcut
Delete
Rename
Properties
3

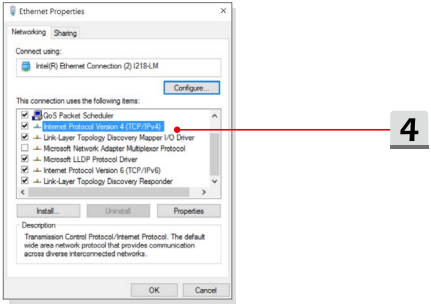
Ethernet Properties
Networking
Sharing
Connect using:
Intel(R) Ethernet Connection (2) I218-LM
Configure...
This connection uses the following items:
QoS Packet Scheduler
Internet Protocol Version 4 (TCP/IPv4)
Link-Layer Topology Discovery Mapper I/O Driver
Microsoft Network Adapter Multiplexor Protocol
Microsoft LLDP Protocol Driver
Internet Protocol Version 6 (TCP/IPv6)
Link-Layer Topology Discovery Responder
Install...
Uninstall
Properties
Description
Transmission Control Protocol/Internet Protocol. The default wide area network protocol that provides communication across diverse interconnected networks.
OK
Cancel
4

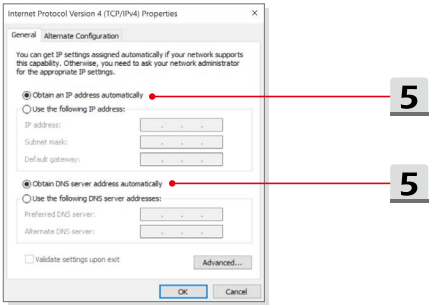
Internet Protocol Version 4 (TCP/IPv4) Properties
General
Alternate Configuration
You can get IP settings assigned automatically if your network supports this capability. Otherwise, you need to ask your network administrator for the appropriate IP settings.
Obtain an IP address automatically
Use the following IP address:
IP address:
Subnet mask:
Default gateway:
Obtain DNS server address automatically
Use the following DNS server addresses:
Preferred DNS server:
Alternate DNS server:
Validate settings upon exit
Advanced...
OK
Cancel
5
5

- Broadband (PPPoE) Connection

1. Go to the desktop. Find the  icon in the lower-right corner of the task bar, right click on it to select [Open Network and Sharing Center].
2. Select [Set up a new connection or network] under [Change your networking settings].
3. Select [Connect to the Internet], and then click [Next].
4. Click [Broadband (PPPoE)].
5. Fills User name, Password, and Connection name fields. Then click [Connect].

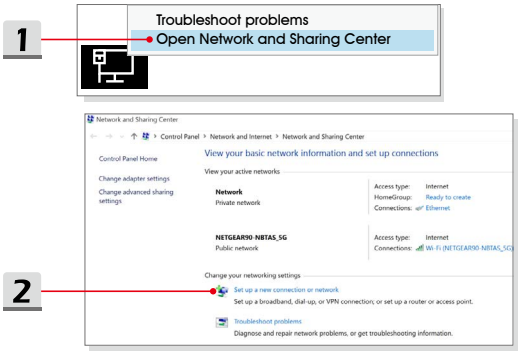

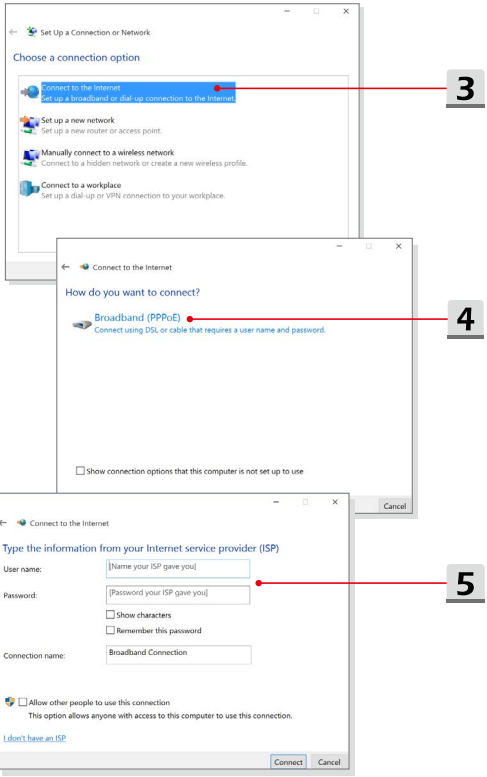
Set Up a Connection or Network
Choose a connection option
Connect to the Internet
Set up a broadband or dial-up connection to the Internet
Set up a new network
Set up a new router or access point.
Manually connect to a wireless network
Connect to a hidden network or create a new wireless profile.
Connect to a workplace
Set up a dial-up or VPN connection to your workplace.
3
Connect to the Internet
How do you want to connect?
Broadband (PPPoE)
Connect using DSL or cable that requires a user name and password.
4
Show connection options that this computer is not set up to use
Cancel
Connect to the Internet
Type the information from your Internet service provider (ISP)
User name:
[Name your ISP gave you]
Password:
[Password your ISP gave you]
Show characters
Remember this password
Connection name:
Broadband Connection
Allow other people to use this connection
This option allows anyone with access to this computer to use this connection.
I don't have an ISP
Connect
Cancel
5

- Static IP Connection

1. Follow the previous steps 1 to 4 in Dynamic IP/PPPoE Connection.
2. Select [General] tab and click [Use the following IP address] and [Use the following DNS server addresses]. You will be asked to fill the IP address, Subnet mask, and Default gateway, and then click [OK].

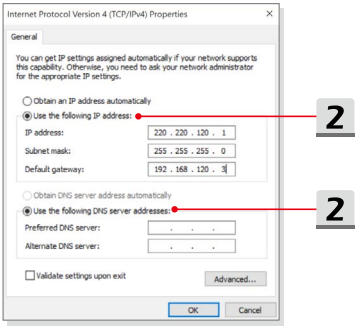

How to Set Up Bluetooth Connection

Bluetooth pairing is a process in which two Bluetooth devices communicate with each other through an established connection.

Activating Bluetooth Connection

- Checking the Bluetooth status
  When Airplane mode is enabled, Bluetooth connection will be turned off. Before setting up a Bluetooth connection, make sure that Airplane mode is turned off.

1. Go to the desktop. Find the icon in the lower-left corner of the screen and click on it.
2. Select [Settings] to bring out [Windows Settings] menu, and then select [Devices] to enter the next Settings menu.
3. Select [Bluetooth & other devices].
4. Switch [On] the Bluetooth connection if it is set to [Off].
5. Or, find the [SCM] icon in the lower-right corner of the task bar and click on it to bring out the main window of System Control Manager. Check if Bluetooth connection is switched on.

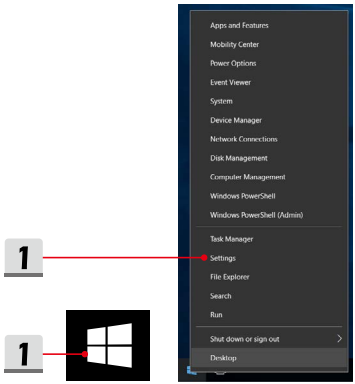

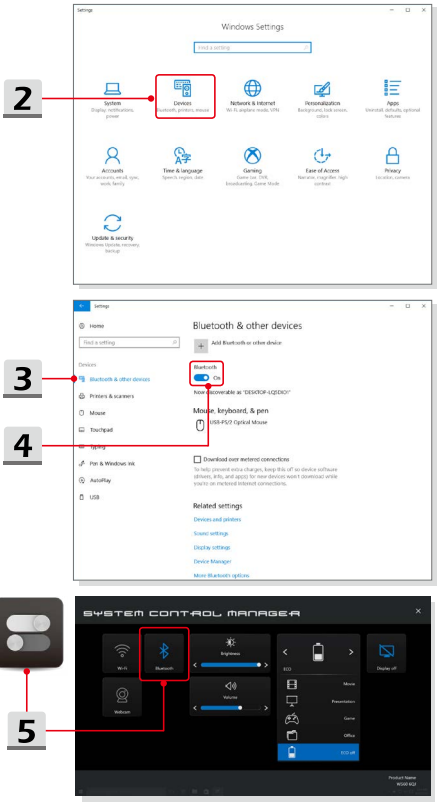
2
Windows Settings
System
Devices
Network & Internet
Personalization
Apps
Accounts
Time & language
Gaming
Ease of Access
Privacy
Update & security
3
4
Bluetooth & other devices
Add Bluetooth or other device
Bluetooth
On
Mouse, keyboard, & pen
Related settings
5
SYSTEM CONTROL MANAGER
Wi-Fi
Bluetooth
Brightness
Volume
Webcam
Display off
Movie
Presentation
Game
Office
Product Name

- Pairing the Bluetooth devices

1. Go to [Start/ Settings/ Devices], and then find [Bluetooth & other devices].
2. Click on [Add Bluetooth or other device].
3. Click on [Bluetooth].
4. Select a device to start pairing.
5. Give the passcode as instructed by the device waiting to be connected, and then click on [Connect] to continue.

