AKP 250/WH

12NC: 857725001510

EAN code: 8003437931857



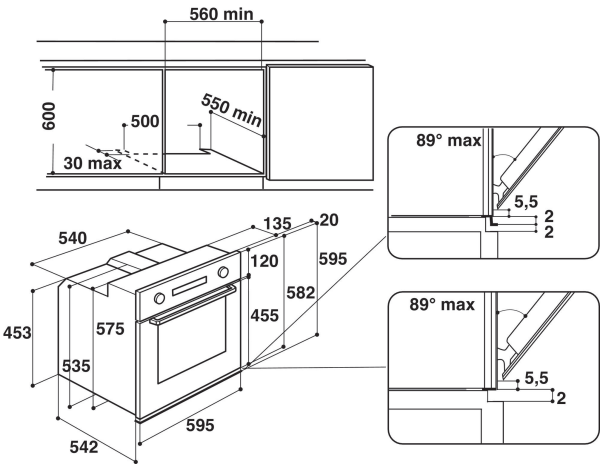

MAIN FEATURES

Product group	Oven
Commercial code	AKP 250/WH
Main colour of product	White
Construction type	Built-in
Type of control	Mechanical and electronic
Type of control setting and signalling devices	-
Are any hobs controls integrated?	No
Which kind of hobs can be controlled?	-
Automatic programmes	Yes
Current (A)	13
Voltage (V)	220-240
Frequency (Hz)	50/60
Length of Electrical Supply Cord (cm)	90
Plug type	No
Depth with open door 90 degree (mm)	-
Height of the product	600
Width of the product	600
Depth of the product	560
Minimum niche height	0
Minimum niche width	0
Niche depth	0
Net weight (kg)	34
Usable volume (of cavity)	60
Noise level (dB(A) re 1 pW)	-
Integrated Cleaning system	Catalytic all sides
Grids	1
Trays	1

TECHNICAL FEATURES

Timer	Programmable
Time control	Electronic
Time-setting options	Start and Stop
Safety device	-
Interior light	Yes
Number of interior lights	1
Position of interior lights	Rear
Oven guides	Grids
Probe	No

PERFORMANCES

Energy input	Electric
Type of energy	Electricity
Energy efficiency class - cavity 1	A
Energy consumption conventional (kWh)	0.79
Energy consumption forced air convection (kWh)	1.15