Philips
Signage Display

- 107 cm (42")
- Full HD

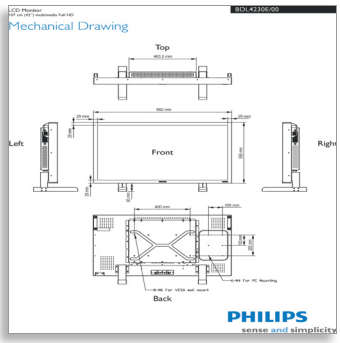

BDL4230E



The best all round public signage display

for indoor applications

Control your costs with this network-controllable 107 cm (42") LCD monitor. Whether used in a network or as a single public display, this model offers a variety of features to meet the most demanding public and corporate viewing applications.

Operational flexibility
- Smart insert in the back cover to place a small PC
- Designed for 24/7 operation
- Remote Management and Configuration via RS232

Optimised for public viewing
- Full HD LCD display, 1920 x 1080p

Lower total cost of ownership
- SmartPower for energy saving
- Brightness automatically adjusts with ambient conditions
- Advanced anti-image sticking function

Sustainable and safe
- Complies with RoHS standards of care for the environment

PHILIPS

Highlights

Full HD LCD display 1920 x 1080p
This display has a resolution that is referred to as Full HD. The state-of-the-art LCD screen technology has the full high definition widescreen resolution of 1080 progressive lines, each with 1920 pixels. This allows the best possible picture quality for HD input signals with up to 1080 lines. It produces brilliant flicker-free progressive scan pictures with optimum brightness and superb colours. This vibrant and sharp image will provide you with an enhanced viewing experience.

SmartPower
The backlight intensity can be controlled and pre-set by the system to reduce the power consumption by up to 50%, which saves substantially on energy costs.

Automatic brightness control
The adjustment of display settings to correspond with ambient light without user intervention.

Advanced anti-image sticking
Static images left on-screen for extended periods of time may leave a "ghost image" or image sticking effect on LCD displays. Although image sticking on LCD displays is not permanent, you want to prevent this happening, especially in locations where content is shown 24/7.

Compliant with RoHS standards
Philips designs and produces display products in compliance with strict Restriction of Hazardous Substances (RoHS) standards that restrict lead and other toxic substances that can harm the environment.

Designed for 24/7 operation
Because business never sleeps, our signage displays are designed for 24/7 use. Taking advantage of superior components to ensure a higher level of quality, you can count on this range of models for complete around-the-clock reliability.

Remote Management: RS232
Remote Management allows the user to control and adjust the displays remotely via the RS232 protocol. Using CEC commands, you are able to have full control over all the displays in your signage network at any time.

Smart Insert
Professional PCs are part of most public signage installations. Quite often they increase the overall depth of the display and cause a lot of cable clutter. So we have designed this display with Smart insert in the back cover, which is ideal for the integration of a professional small form factor PC. On top of that, the cable management system offers a great solution to keep your cables neat and professional-looking.





Smart Insert



VIDIWALL

SmartPower


Portrait Mounting


Signage Display
107 cm (42") Full HD

BDL4230E/00

Specifications

Picture/Display
- Diagonal screen size: 42 inch / 107 cm
- Panel resolution: 1920 x 1080p
- Optimum resolution: 1920 x 1080 @ 60 Hz
- Brightness: 500 cd/m²
- Contrast ratio (typical): 1400:1
- Response time (typical): 5 ms
- Aspect ratio: 16:9
- Viewing Angle (H / V): 178 / 178 degree
- Pixel pitch: 0.485 x 0.485
- Display colours: 1.06 Billion colours
- Picture enhancement: 3/2 - 2/2 motion pull down, 3D Combfilter, Motion compens. deinterlacing, Progressive scan, 3D MA deinterlacing, Dynamic contrast enhancement

Supported Display Resolution
- Computer formats

Resolution	Refresh rate
640 x 480	60, 67, 72, 75 Hz
800 x 600	56, 60, 72, 75 Hz
1024 x 768	60 Hz
1280 x 768	60 Hz
1280 x 800	60 Hz
1280 x 1024	60 Hz
1360 x 768	60 Hz
1366 x 768	60 Hz
1440 x 900	60 Hz
1600 x 1200	60 Hz
1920 x 1080	60 Hz
1920 x 1200	60 Hz

- Video formats

Resolution	Refresh rate
480i	60 Hz
480p	60 Hz
576p	50 Hz
576i	50 Hz
720p	50, 60 Hz
1080i	50, 60 Hz
1080p	50, 60 Hz

Connectivity
- PC: VGA-in D-Sub 15HD, VGA-out D-Sub 15HD, DVI-D x 1, RS232 D-Sub9, RS232 D-sub9 output, 3.5 mm PC audio input x 1
- AV input: HDMI x 1, Component (BNC) x 1, Composite (RCA) x 1, Composite (BNC) x 1, S-video x 1, Audio (L/R) x 2
- AV output: Composite (BNC) x 1, Audio (L/R) x 1
- Other connections: AC-out, External loudspeaker connector

Convenience
- Placement: Portrait, Landscape
- Tiled Matrix: 5 x 5
- Picture in picture: PBP, PIP, POP
- Screen-saving functions: Pixel shift, Low bright
- Signal Loop Through: RS232, VGA
- Keyboard control: Hidden, Lockable
- Remote control signal: Lockable
- Ease of installation: AC Out, Carrying Handles, Smart Insert
- Energy-saving functions: Ambient light sensor, Smart Power
- Picture performance: Advanced colour control
- Packaging: Reusable box
- Network controllable: RS232

Dimensions
- Bezel thickness: 2.9 cm/1.14 inch
- Smart Insert mount: 160 x 300 x 55 mm
- Smart insert in inch (WxHxD): 6.30 x 11.81 x 2.17 inch
- Set dimensions (W x H x D): 993 x 586 x 120 mm
- Set dimensions in inch (W x H x D): 39.1 x 23.1 x 4.7 inch
- Set dimensions with stand (H x D): 666 x 319 mm
- Set dimensions with stand in inch (H x D): 26.2 x 12.6 inch
- Product weight: 24 kg
- Product weight (lb): 52.91
- VESA Mount: 200 x 200 mm, 400 x 200 mm (Set), 100 x 100 mm (Smart insert)

Operating conditions
- Temperature range (operation): 0 - 40 °C
- Relative humidity: 5 - 90 %
- MTBF: 50,000 hour(s)

Power
- Consumption (On mode): Typ. 120 W
- Standby power consumption: <1 W

Sound
- Built-in speakers: 2 x 12 W (8 ohm)

Accessories
- Included accessories: Remote Control, Batteries for remote control, AC Power Cord, VGA cable, User manual on CD-ROM, Quick start guide
- Optional accessories: Fixed wall mount, Flexible wall mount, Ceiling mount
- Stand: BM05411

Miscellaneous
- Warranty: Europe/North America: 3 years
- On-Screen Display Languages: English, French, German, Italian, Polish, Turkish, Russian, Simplified Chinese
- Regulatory approvals: CE, FCC, Class B, CCC, RoHS, UL/cUL

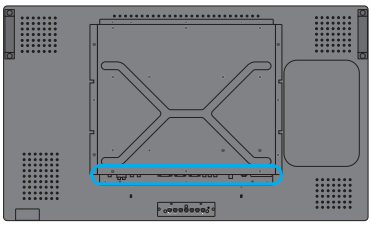



Issue date 2013-08-08

Version: 4.4.2

12 NC: 8670 000 62217
EAN: 87 12581 53794 4

© 2013 Koninklijke Philips N.V.
All Rights reserved.

Specifications are subject to change without notice. Trademarks are the property of Koninklijke Philips N.V. or their respective owners.

www.philips.com