Gebrauchsanweisung
Kühl-Gefrier-Kombination

Operating instructions
Combined fridge-freezer

Mode d'emploi
Combiné réfrigérateur-congélateur

Instrucciones de uso
Combinado frigorífico-congelador

DE

EN

FR

ES

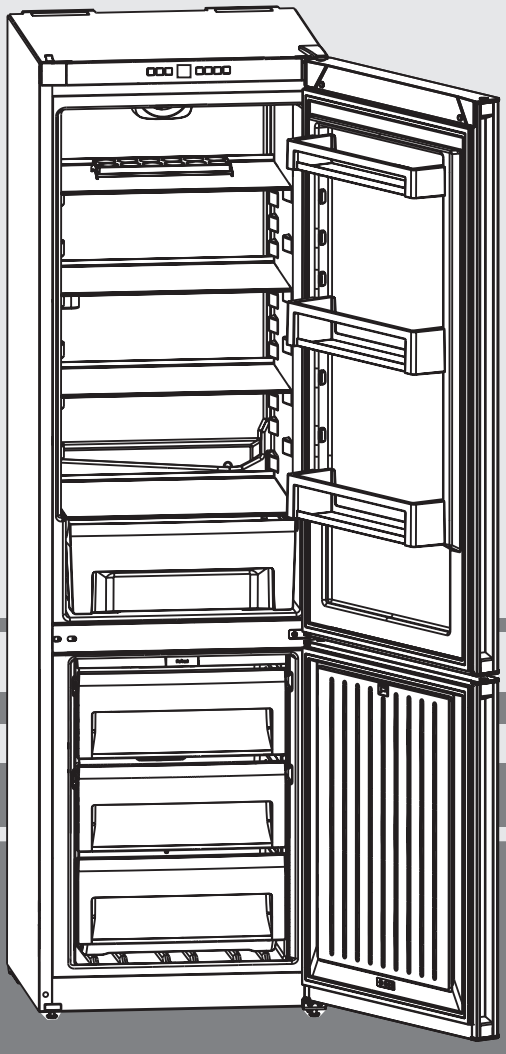

020517 **7082 887-01**

CN(P)(el)(st) 42/43/48

LIEBHERR

Contents

1 The appliance at a glance 10
1.1 Overview of the appliance and equipment 10
1.2 Range of appliance applications 10
1.3 Conformity 10
1.4 Installation dimensions 10
1.5 Saving energy 11
2 General safety information 11
3 Operating and display elements 12
3.1 Operating controls 12
3.2 Temperature display 12
4 Putting into operation 12
4.1 Transporting the appliance 12
4.2 Installing the appliance 12
4.3 Changing the door swing 13
4.4 Installing appliance in a row of kitchen units 13
4.5 Disposing of packaging 13
4.6 Connecting the appliance 13
4.7 Switching the appliance on 13
5 Operation 14
5.1 Child lock 14
5.2 Door alarm 14
5.3 Temperature alarm 14
5.4 Sabbath Mode 14
5.5 Fridge section 14
5.6 Freezer section 15
6 Maintenance 16
6.1 Defrosting with NoFrost 16
6.2 Cleaning the appliance 16
6.3 Customer service 16
7 Faults 16
8 Shutting your appliance down 17
8.1 Switching off the appliance 17
8.2 Shutting your appliance down 17
9 Disposing of the appliance 17

All types and models are subject to continuous improvement by the manufacturer. We therefore reserve the right to make modifications to the shape, equipment and technology.
To familiarise yourself with all the advantages your new appliance has to offer, please read the information contained in these instructions carefully.
The instructions apply to several models, so may vary slightly. Sections that only apply to certain appliances are marked with an asterisk (*).
Handling instructions are marked with a ▶, handling results with a ▷.

1 The appliance at a glance

1.1 Overview of the appliance and equipment

Please fold out the last page with the illustrations.

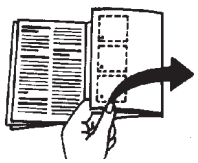

Note

▶ Sort food into types as shown in the illustration. The appliance will then work with energy efficiency.

▶ When the appliance is delivered, the shelves, drawers and compartments are arranged for optimum energy efficiency.

Fig. 1

(1) Controls
(2) Door rack, adjustable*
(3) Bottle shelf*
(4) Vegetable crisper
(5) Coldest zone
(6) Drain opening
(7) Shelf, adjustable
(8) Egg tray
(9) Type plate
(10) Freezer drawer
(11) VarioSpace
(12) Ice cube tray
(13) Front adjustable feet
(14)Transport handles
(15) Bottle rack*

1.2 Range of appliance applications

Intended use

The appliance is only suitable for cooling food products in a domestic or household-like environment. This includes, for example, use:
- in staff kitchens, bed and breakfast operations,
- by guests in country houses, hotels, motels and other accommodation,
- for catering and similar services in wholesale.

All other types of application are impermissible.

Foreseeable erroneous use

The following applications are expressly prohibited:
- Storage and cooling of medication, blood plasma, laboratory compounds or similar substances and products subject to the Medical Device Directive 2007/47/EC
- Use in explosive areas
- Use on moving substrates, such as in ships, locomotive vehicles or aircraft
- Storage of live animals

Misusing the appliance may result in damages to the stored goods or cause them to spoil or decay.

Climate classes

Depending on its climate class, the appliance is designed for operation within certain ambient temperature limits. The correct climate rating for your appliance is indicated on the type plate.

Note

▶ In order to guarantee fault-free operation comply with the specified ambient temperatures.

Climate class	for ambient temperatures from
SN	10 °C up to 32 °C
N	16 °C up to 32 °C
ST	16 °C up to 38 °C
T	16 °C up to 43 °C

1.3 Conformity

The refrigerant circuit has been tested for leaks. The appliance meets the relevant safety conditions and the directives 2014/35/EU, 2014/30/EU, 2009/125/EC, 2011/65/EU and 2010/30/EU.

1.4 Installation dimensions

Fig. 2

	h	a	b	c	d
CN(el) 4213	1861	600	657[x]	610	1200[x]
CN(P)(el) 4313	1861	600	657[x]	610	1200[x]
CN(P)(el)(st) 4813	2011	600	657[x]	610	1200[x]

[x] This dimension increases by 35 mm in case of appliances with wall spacer brackets attached (see 4.2).

* according to model and design

1.5 Saving energy

- Always make sure there is good ventilation and aeration. Do not cover ventilation openings or grilles.
- Always keep the vents clear.
- Avoid positioning the appliance in direct sunlight, near cookers, radiators and similar sources of heat.
- The energy consumption is dependent on the installation conditions, e.g. the ambient temperature (see 1.2). If the ambient temperature deviates from the standard temperature of 25°C, the energy consumption may differ.
- Open the appliance as briefly as possible.
- The lower the temperature is set, the higher the energy consumption.
- Organise foods into types (see “The appliance at a glance”).
- Keep all food properly packed and covered. This prevents frost from forming.
- Only take food out for as long as necessary, so that it does not warm up excessively.
- Inserting warm food: allow to cool down to room temperature first.
- Leave frozen food to defrost inside the fridge.
- With longer holiday periods, empty the fridge section and switch off.
- Dust deposits increase energy consumption: Dust should be removed from the refrigeration unit and heat exchanger - metal grid at the back of the appliance - once a year. **Fig. 10**

2 General safety information

Risks for the user:

- This appliance can be used by children as well as persons with limited metal, sensory and physical capabilities or with a lack of experience and knowledge, if supervised or following instruction regarding safe use of the appliance, and if they understand the risks associated with it. Children must not play with the appliance. Cleaning and user maintenance must not be performed by children when unsupervised. Children from 3-8 years are permitted to load and unload the appliance. Children under 3 years of age must be kept away from the appliance unless constantly supervised.
- When disconnecting the appliance from the mains, always pull on the plug. Never tug on the cable.
- In case of faults, unplug the mains plug or switch off the circuit breaker.
- Do not damage the mains cable. The appliance must not be operated with a defective mains cable.
- Repairs, appliance interventions and changing the mains cable must be performed by customer service or another suitably trained specialist only.
- Only install, connect and dispose of the appliance in accordance with the specifications in the instructions.
- Keep these instructions in a safe place and, if necessary, hand them over to the next owner of the appliance.
- Special lamps (light bulbs, LED, fluorescent lamps) inside the appliance are used to illuminate its interior and are not suitable for room lighting.

Risk of fire:

- The refrigerant R 600a inside the appliance is environmentally friendly, but flammable. Leaking refrigerant may ignite.
  - Do not damage the pipes in the coolant circuit.
  - Do not use a naked flame or other source of ignition inside the appliance.
  - Do not use electrical devices inside the appliance (e.g. steam cleaners, heaters, ice cream makers, etc.).
  - If the refrigerant leaks: remove any naked flames or ignition sources from the vicinity of the leakage point. Properly air the room. Inform customer services.
- Do not use the appliance to store explosive materials or aerosol cans with flammable propellants, such as butane, propane, pentane etc. These types of aerosol can be identified by the list of contents printed on it, or by a flame symbol. Any leaking gas may ignite due to electrical parts.
- Keep burning candles, lamps and other objects with naked flames away from the appliance, so that these do not set fire to the appliance.
- Alcoholic beverages and other containers bearing alcohol must be sealed tight for storage. Any leaking alcohol may ignite due to electrical parts.

Risk of falling and toppling:

- Do not use the base, drawers, or doors, etc. as a step or a support. This applies in particular to children.

Risk of food poisoning:

- Do not eat foods past their expiry date.

Risk of freezing, numbness and pain:

- Avoid extended skin contact with cold surfaces or chilled/frozen goods, or implement protective measures, for example use gloves. Do not eat ice cream - particularly ice lollies or ice cubes - immediately or when too cold.

Risk of injury and damage to the appliance:

- Hot steam can cause injuries. Do not use an electric heater or steam cleaner, naked flames or defrost spray to defrost.
- Do not remove ice with sharp objects.

Risk of crushing:

- When opening and closing the door, do not reach into the hinge. Fingers may become trapped.

Symbols on the appliance:

	The symbol may be found on the compressor. It pertains to the oil in the compressor and indicates the following danger: Can be fatal if swallowed or with penetration of the respiratory tract. This information is only significant for recycling. No risk exists with normal use.

Observe the specific information in the other chapters:

⚠	DANGER	Identifies an immediately dangerous situation that will result in death or serious bodily injuries if it is not prevented.
⚠	WARNING	Identifies a dangerous situation that could result in death or serious bodily injuries if it is not prevented.
⚠	CAUTION	Identifies a dangerous situation that could result in minor or moderate bodily injuries if it is not prevented.
	ATTENTION	Identifies a dangerous situation that could result in property damage if it is not prevented.
	Note	Identifies useful information and tips.

3 Operating and display elements

3.1 Operating controls

Fig. 11

(1) On/Off button, fridge section
(2) Ventilation button
(3) Adjustment button, fridge section
(4) Temperature display, fridge section
(5) Temperature display, freezer section
(6) Adjustment button, freezer section
(7) SuperFrost button
(8) Alarm button
(9) On/Off button, freezer section
(10) SuperFrost symbol
(11) Alarm symbol
(12) Sabbath Mode symbol
(13) Menu symbol
(14) Child lock symbol
(15) Ventilation symbol

3.2 Temperature display

The following are displayed in normal mode:
- the set freezer temperature
- the set fridge temperature

The temperature display on the freezer section flashes:
- the temperature setting is being changed
- the temperature is not yet sufficiently cold after switching on
- the temperature has risen by several degrees

4 Putting into operation

4.1 Transporting the appliance

⚠ **CAUTION**

Risk of injury and damage to the appliance with incorrect transport!

▶ Transport the appliance packaged.
▶ Transport the appliance upright.
▶ Do not transport the appliance alone.

4.2 Installing the appliance

⚠ **WARNING**

Risk of fire due to moisture!
If live parts or the mains cable become damp, this can cause a short circuit.

▶ The appliance is only designed for use in closed rooms. Do not operate the appliance outdoors or in moist areas or areas in contact with spraying water.

⚠ **WARNING**

Risk of fire due to short circuit!
In case of contact between the mains cable/plug on the appliance or another appliance and the back of the appliance, the mains cable/plug may be damaged by the appliance vibrations, resulting in a short circuit.

▶ Install the appliance so that it does not come into contact with a plug or mains cable.
▶ Do not connect the appliance or another appliance to sockets in the vicinity of the rear of the appliance.

⚠ **WARNING**

Risk of fire due to refrigerant!
The refrigerant R 600a inside the appliance is environmentally friendly, but flammable. Leaking refrigerant may ignite.

▶ Do not damage the pipes in the refrigerant circuit.

⚠ **WARNING**

Risk of fire and damage to the appliance!

▶ Do not place heat-emitting appliances, e.g. microwave oven, toaster, etc., on top of the appliance!

⚠ **WARNING**

Risk of fire and damage to the appliance with blocked ventilation openings!

▶ Keep the ventilation openings clear at all times. Always make sure there is good ventilation and aeration!

ATTENTION

Risk of damage due to condensate!

▶ Do not place the appliance directly next to another cooling/ refrigeration unit.

❑ If the appliance is damaged, contact your supplier immediately - before plugging it in.
❑ The floor on which the appliance stands must be horizontal and level.
❑ Avoid positioning the appliance in direct sunlight, near cookers, radiators and similar sources of heat.
❑ Always position the appliance with the rear directly against the wall, or with wall spacer brackets attached (see below) then with these directly against the wall.
❑ The appliance may only be moved when empty.
❑ The floor beneath the appliance must be the same height as the surrounding floor.
❑ Do not install the appliance without help.
❑ The more refrigerant R 600a there is in the appliance, the larger the room must be in which it is located. In rooms that are too small, a leak can produce a flammable gas/air mixture. According to the standard EN 378, the room where the appliance is installed must be at least 1 m3 per 11 g of refrigerant R 600a. The quantity of refrigerant used in your appliance is indicated on the type plate on the inside of the appliance.

▶ Detach the connection cable from the rear of the appliance. When doing so remove the cable bracket, otherwise the appliance will generate vibration noise!
▶ Remove the protective film on the outside of the housing and take off the trim strips.
▶ Remove all the transport safety devices.

In order to achieve the stated energy consumption, it is necessary to use the spacer brackets provided with some appliances. This results in the appliance depth increasing by approx. 35 mm.

* according to model and design

The appliance is fully functional without the spacer brackets, but its energy consumption will be slightly higher.

▶ **Fig. 9** In case of an appliance with wall spacer brackets, mount these brackets on the rear side of the appliance, top left and right.

▶ Dispose of the packaging. (see 4.5)

▶ **Fig. 4** Using the open-ended spanner provided and with the aid of a spirit level, align and level the appliance via the adjustable feet (A). Then support the door: Unscrew the adjustable foot on the bearing block (B) until it touches the floor, then a further 90°.

Note

▶ Clean the appliance (see 6.2).

If the appliance is installed in a very damp environment, condensation may form on the appliance exterior.

▶ Always make sure there is good ventilation and aeration at the installation site.

4.3 Changing the door swing

You can change over the door hinges if necessary:



▶ **see assembly instructions provided.**

Make sure that the following tools are to hand:

❑ Torx® 25
❑ Screwdriver
❑ If necessary, cordless screwdriver
❑ If necessary, a second person to assist with installation

Note

▶ Take food out of the door racks before removing the door to avoid food falling out.

CAUTION

Danger of injury when the door tilts outwards!

▶ Hold the door well.
▶ Carefully set down the door.

WARNING

Danger of injury due to door falling out!

If the bearing parts are not sufficiently firmly screwed in place, the door may fall out. This can result in serious injuries.

Furthermore, the door may not close fully, whereby the appliance cooling will not function correctly.

▶ Screw the bearing blocks tight with 4 Nm.
▶ Check all screws and tighten if necessary.

4.4 Installing appliance in a row of kitchen units

The appliance can be fitted into kitchen units.



▶ **see assembly instructions provided.**

Ventilation requirements:

A [mm]	B [mm]	C [cm²]	D [mm]	E [mm]
657 x	76	min. 300	min. 50	min. 19

x This dimension increases by 35 mm in case of appliances with wall spacer brackets attached (see 4.2).

The appliance may protrude further, depending on the depth of the kitchen units and the use of wall spacer brackets.

ATTENTION

Risk of damage to the appliance due to overheating with insufficient ventilation!

The compressor may be damaged with insufficient ventilation.

▶ Ensure sufficient ventilation.
▶ Observe the ventilation requirements.

4.5 Disposing of packaging

EN

WARNING

Risk of suffocation due to packaging material and film!

▶ Do not allow children to play with packaging material.

The appliance packaging is produced from recyclable materials:

- Corrugated board/cardboard
- Polystyrene foam parts
- Polythene sheets and bags
- Polypropylene straps
- Nailed wooden frame with polythene panels*

▶ Please take the packaging material to an official collection point.

4.6 Connecting the appliance

ATTENTION

Incorrect connection!

Damage to the electrics/electronics.

▶ Do not use stand-alone inverters.
▶ Do not use energy-saving plugs.

WARNING

Incorrect connection!

Risk of fire.

▶ Do not use extension cables.
▶ Do not use distribution strips.

Power supply (AC) and voltage at the operating point must comply with the details on the type plate (see “The appliance at a glance”).

The socket must be earthed and electrically protected. The trigger current of the fuse must be between 10 A and 16 A.

The socket must be easily accessible, so that the appliance can be quickly disconnected from the power supply in an emergency. It must not be behind the appliance.

▶ Check electrical connections.
▶ Insert the plug.

4.7 Switching the appliance on

Note

▶ To switch on the entire appliance, you only need to switch on the freezer section. The fridge section is automatically switched on with it.

The appliance should have been operating for about 2 hours before you stock it with frozen food for the first time.

Only place food in the freezer once the temperature display shows at least -18°C.

4.7.1 Switching on the freezer section

▶ Press On/Off button for the freezer section Fig. 11 (9).
▷ The appliance is switched on. The temperature display shows the set temperature. The temperature display for the freezer section and the alarm symbol flash until the temperature is cold enough.

4.7.2 Switching on the fridge section

Note

▶ When the fridge section is switched on, the freezer section switches on automatically as well.

If the fridge section was switched off (e.g. with an extended absence due to holiday), this can be switched on again separately.

▶ Press On/Off button for the fridge section Fig. 11 (1).
▷ The interior light comes on when the door is open.

▷ The temperature displays light up. The fridge and freezer sections are switched on.

5 Operation

5.1 Child lock

Using the child lock, you can ensure that children are unable to accidentally switch off the appliance when playing.



5.1.1 Setting the child lock

To switch on the function:

▶ Activate the setting mode: Press SuperFrost button Fig. 11 (7) for approx. 5 seconds.
▷ The menu symbol Fig. 11 (13) is shown on the display.
▷ **S** flashes on the display.
▶ Using the adjustment button for the freezer section Fig. 11 (6) select **c**.
▶ Briefly confirm with the SuperFrost button Fig. 11 (7).
▷ **c1** appears on the display.
▶ Briefly confirm with the SuperFrost button Fig. 11 (7).
▷ The child lock symbol Fig. 11 (14) lights up on the display.
▷ **c** flashes on the display.
▷ The child lock function is switched on.
To cancel setting mode:
▶ Briefly press the On/Off button for the freezer section Fig. 11 (9).
-or-
▶ wait 5 min.
▷ The temperature display shows the temperature again.

To switch off the function:

▶ Activate the setting mode: Press SuperFrost button Fig. 11 (7) for approx. 5 seconds.
▷ The menu symbol Fig. 11 (13) is shown on the display.
▷ **c** flashes on the display.
▶ Briefly confirm with the SuperFrost button Fig. 11 (7).
▷ **c0** appears on the display.
▶ The child lock symbol Fig. 11 (14) goes out.
▷ **c** flashes on the display.
▷ The child lock function is switched off.
To cancel setting mode:
▶ Briefly press the On/Off button for the freezer section Fig. 11 (9).
-or-
▶ Wait 5 min.
▷ The temperature display shows the temperature again.

5.2 Door alarm

For the fridge section
If the door is kept open for longer than 60 seconds, the acoustic warning signal sounds.
The acoustic warning signal is automatically switched off when the door is closed.



5.2.1 Switching the door alarm to mute

The acoustic warning signal can be switched to mute with an open door. The warning signal mute function is effective while the door is open.

▶ Press alarm button Fig. 11 (8).

5.3 Temperature alarm

When the freezer temperature is no longer cold enough, the acoustic warning signal sounds.
The temperature display and the alarm symbol flash at the same time.



The following may be the cause of the temperature being too high:

- fresh hot food has been put in
- too much warm air has got in while you were sorting out the freezer or removing items
- there has been an extended power failure
- the appliance is faulty

The acoustic warning signal is automatically switched off and the alarm symbol goes out when the temperature is cold enough again.
If the alarm state remains: (See faults).

Note

If the temperature is not cold enough, food may go off.
▶ Check the quality of the food. Do not consume food that has spoiled.

5.3.1 Switching the temperature alarm to mute

The acoustic warning signal can be switched to mute. When the temperature is cold enough again, the alarm function becomes active again.
▶ Press alarm button Fig. 11 (8).

5.4 Sabbath Mode

This function satisfies religious requirements on the Sabbath and Jewish holidays. If Sabbath Mode is activated, some functions of the control electronics are switched off. After setting Sabbath Mode, you no longer need to concern yourself with the control lamps, digits, symbols, displays, alarm messages and fans. The defrost cycle operates only for the specified time, without consideration to the refrigerator consumption. After a power failure, the appliance switches back to Sabbath Mode automatically.

S

WARNING

Risk of food poisoning!
If a power failure occurs while Sabbath Mode is active, this message is not saved. After the power failure is over, the appliance continues to operate in Sabbath Mode. Once this comes to an end, no message is issued regarding the power failure in the temperature display.
If a power failure has occurred in Sabbath Mode:
▶ Check the quality of your food. Do not eat foods that have defrosted!

- All functions are blocked until Sabbath Mode is switched off.
- If functions such as SuperFrost, SuperCool, ventilation, etc. are active when Sabbath Mode is switched on, these remain active.
- No acoustic signals are issued and no warnings/settings are displayed in the temperature display (e.g. temperature alarm, door alarm).
- The interior lighting is deactivated.

5.4.1 Setting Sabbath Mode

▶ Activate the setting mode: Press SuperFrost button Fig. 11 (7) for approx. 5 seconds.
▷ **S** flashes on the display.
▷ The menu symbol Fig. 11 (13) lights up.
▶ In order to call up the Sabbath Mode function: Press SuperFrost button Fig. 11 (7) briefly.
If **S1** appears on the display:
▶ To **switch on** Sabbath Mode, press the SuperFrost button Fig. 11 (7) briefly.
▶ To **switch off** Sabbath Mode, press the SuperFrost button Fig. 11 (7) briefly.
If **S0** appears on the display:
▶ Briefly confirm with the SuperFrost button Fig. 11 (7).
▶ Deactivate the setting mode: Press On/Off button for the freezer section Fig. 11 (9).
-or-
▶ wait 5 min.
▷ The Sabbath Mode symbol is displayed in the temperature display, as long as Sabbath Mode is active.
▷ Sabbath Mode switches off automatically after 120 hours, if it has not been manually switched off beforehand.

5.5 Fridge section

Natural air circulation in the fridge section results in different temperature zones forming. The coldest zone is immediately above the vegetable bins and at the rear wall. The warmest zone is up the top at the front, and in the door.

* according to model and design

5.5.1 Refrigerating food

Note
Insufficient ventilation results in the energy consumption rising and the refrigeration capacity falling.
▶ Always keep the vents clear.

▶ Particularly perishable foods such as cooked dishes, meat and sausages should be stored in the coldest zone. Store butter and preserves in the top area and in the door. (See “The appliance at a glance”)
▶ Use reusable plastic, metal, aluminium or glass containers and food wrap as packaging material.
▶ Always keep liquids and foods that give off or absorb odours or flavours covered, or store these in airtight containers.
▶ Food that gives off a large amount of ethylene and foods that are highly sensitive to this, such as fruit, vegetables, salad, should always be separated or packed so as not to reduce storage life; e.g. do not store tomatoes together with kiwi fruit or cabbage.
▶ Do not pack food too tightly, i.e. store in such a way that air can circulate freely.

5.5.2 Setting the temperature

The temperature depends on the following factors:
- the frequency of opening the door
- the room temperature of the installation location
- the type, temperature and quantity of the food

Recommended temperature setting: 5 °C
The temperature can be changed sequentially. When the setting 1 °C is reached, it begins again at 9 °C.
▶ Call up the temperature function: Press the fridge adjustment button Fig. 11 (3).
▷ The previously set value is shown flashing in the temperature display.
▶ Changing the temperature in 1°C increments: Press the fridge adjustment button Fig. 11 (3) repeatedly until the desired temperature is shown on the temperature display.
▷ During adjustment the value flashes on the display.
▷ Approx. 5 sec. after the last button press, the new setting is accepted. The interior temperature slowly adjusts to the new value.

5.5.3 Fan

Cooling by circulating air is recommended:
- at high room temperature (above33 °C)
- with high humidity levels

Cooling by circulating air uses slightly more energy.
To save energy, the fan automatically switches off when the door is opened.

Switching on the fan
▶ Press ventilation button Fig. 11 (2) briefly.
▷ The ventilation symbol Fig. 11 (15) is shown on the display.
▷ The fan is active. With some appliances, it only switches on if the compressor is running.

Switching off the fan
▶ Press ventilation button Fig. 11 (2) briefly.
▷ The ventilation symbol Fig. 11 (15) goes out.
▷ The fan is switched off.

5.5.4 Shelves

Moving or removing shelves
Fig. 6
▶ To completely remove the shelf, observe the sequence of actions indicated.
▶ Insert shelf with the raised edge at the back pointing upwards.

5.5.5 Door rack

Removing the door rack
Fig. 7
▶ Remove the rack as shown in the illustration.

5.6 Freezer section

You can store frozen and deep-frozen food, make ice cubes and freeze fresh foods in the freezer section.

5.6.1 Freezing food

Only freeze the maximum number of kilograms of fresh food as stated on the type plate (see “The appliance at a glance”) under “freezing capacity .kg/24h” within a 24 hour period. The drawers can each be loaded with max. 20 kg of frozen food.

EN

CAUTION
Danger of injury due to glass fragments!
Drinks bottles and drinks cans may explode during freezing. This applies in particular to drinks containing carbon dioxide.
▶ Do not freeze drinks bottles and drinks cans!

To ensure that food freezes right through, the following quantities should not be exceeded per package:
- Fruit, vegetables, up to 1 kg
- Meat, up to 2.5 kg

▶ Package food in portions in freezer bags, reusable plastic, metal or aluminium containers.

5.6.2 Storage times

Guideline values for the storage time of the various foods in the freezer section:	
Ice cream	2 to 6 months
Sausages, ham	2 to 6 months
Game, pork	2 to 6 months
Bread, bakery goods	6 to 10 months
Fish, oily	2 to 6 months
Fish, non oily	6 to 12 months
Cheese	2 to 6 months
Poultry, beef	6 to 12 months
Fruit, vegetables	6 to 12 months

The storage periods shown here are guideline values.

5.6.3 Defrosting food

- in the refrigerator
- in the microwave
- in the oven/fan oven
- at room temperature

▶ Only take out the amount of food you need. Use defrosted food as quickly as possible.
▶ Only refreeze defrosted food in exceptional cases.

5.6.4 Setting the temperature

Recommended temperature setting: -18 °C
The temperature can be changed sequentially. When the setting -26 °C is reached, it begins again at -16 °C.
▶ Call up the temperature function: Press the freezer adjustment button Fig. 11 (6).
▷ The current temperature flashes on the temperature display.
▶ Press the freezer adjustment button Fig. 11 (6) repeatedly until the desired temperature is displayed.

5.6.5 SuperFrost

With this function, you can quickly freeze fresh food through completely. The appliance operates at maximum freezing capacity and the noises from the cooling unit may be temporarily louder than usual.
Only freeze the maximum number of kilograms of fresh food as stated on the type plate under “freezing capacity .kg/24h” in a 24 hour period. This maximum amount for freezing depends on the model and climate class.
You will need to switch SuperFrost on promptly, depending on how much fresh food is to be frozen.
Package the food and spread it as widely as possible. Do not allow food which is to be frozen to come into contact with food that is already frozen, to prevent this defrosting.
You do not need to switch on SuperFrost under the following circumstances:

- when inserting foods that are already frozen
- if you are freezing up to approx. 2 kg of fresh food every day

Freezing with SuperFrost

▶ Press SuperFrost button Fig. 11 (7) briefly.
▷ The SuperFrost symbol Fig. 11 (10) is shown on the display.
▷ The freezing temperature is reduced, and the appliance operates at the maximum freezing capacity.

Note

▶ Pressing the SuperFrost button can cause the compressor to switch on up to 8 minutes later, thanks to the integrated switch-on delay. This delay increases the service life of the compressor.

For a small amount of frozen goods:
▶ Wait approx. 6 hours.
For the maximum amount of frozen goods (see type plate):
▶ Wait approx. 24 hours.
▶ Place packaged food in the top drawers.
▷ SuperFrost switches off automatically after no more than approx. 65 hours.
▷ The SuperFrost symbol Fig. 11 (10) goes out when freezing is finished.
▷The appliance continues in normal energy-saving mode.

5.6.6 Drawers

Note

Insufficient ventilation results in the energy consumption rising and the refrigeration capacity falling.
Appliances with NoFrost:
▶ Leave the bottom drawer inside the appliance!
▶ Always keep the inside vents at the rear wall clear!

▶ Remove the drawers as shown in **Fig. 5**.

5.6.7 VarioSpace

Fig. 3

You can remove the drawers. This makes space for large freezer items. Poultry, large joints of meat and game, and large bakery goods can be stored and subsequently prepared whole.
▶ The drawers can each be loaded with max. 20 kg of frozen food.

6 Maintenance

6.1 Defrosting with NoFrost

The NoFrost system automatically defrosts the appliance.

Fridge section:

The defrost water evaporates through the heat of the compressor. Water droplets on the rear wall arise with the function and are completely normal.
▶ Clean the drain opening regularly so that the defrost water can drain away. (see 6.2)

Freezer section:

The moisture collects on the evaporator, where it is periodically defrosted and evaporated.
▶ It is not necessary to defrost the appliance manually.

6.2 Cleaning the appliance

WARNING

Risk of injury and damage to the appliance due to hot steam!
Hot steam can cause burns and damage surfaces.
▶ Do not use steam cleaning devices!

ATTENTION

Improper cleaning will damage the appliance!
▶ Do not use cleaning agents in their concentrated form.
▶ Do not use any abrasive or scouring sponges or steel wool.
▶ Do not use sharp, abrasive cleaning agents, or products containing sand, chloride or acid.
▶ Do not use chemical solvents.
▶ Do not damage or remove the type plate inside the appliance. It is important for customer service.
▶ Do not tear off, bend or damage any cables or other components.
▶ Do not allow any cleaning water to enter the drain channel, the ventilation grille or electrical components.
▶ Use soft cleaning cloths and an all-purpose cleaner with a neutral pH value.
▶ Only use food safe cleaning materials and products inside the appliance.

▶ **Empty the appliance.**
▶ **Unplug the mains plug.**



▶ **Clean the outer walls and interior surfaces, as well as equipment parts** by hand with lukewarm water and a little detergent.
▶ **Only clean painted side walls** by wiping with a soft, clean cloth. In case of heavy soiling, use lukewarm water and a neutral cleaning product.
▶ **Only clean painted door surfaces** by wiping with a soft, clean cloth. In case of heavy soiling, use a little water or a neutral cleaning product. Optionally, a microfibre cloth can be used.
▶ Clean the **drain opening Fig. 8**: If necessary remove deposits with a thin object, such as a cotton bud or similar.

After cleaning:

▶ Rub the appliance and equipment parts dry.
▶ Connect the appliance again and switch it on.
▶ Switch on SuperFrost (see 5.6.4).

When the temperature is cold enough once more:
▶ Place the food in again.

6.3 Customer service

Fig. 12

First check whether you can remedy the fault yourself. (See faults). If this is not the case, please contact customer service. Please see the enclosed customer service directory for the address.

WARNING

Danger of injury due to unprofessional repair!
▶ Repairs and interventions affecting the appliance and the mains cable must be performed by customer service unless expressly stated (see maintenance).

▶ For the appliance designation Fig. 12 (1), service no. Fig. 12 (2) and the serial no. Fig. 12 (3) refer to the type plate. The type plate is located on the left, inside the machine.
▶ Inform customer service and describe the fault, appliance designation Fig. 12 (1), service no. Fig. 12 (2) and serial no. Fig. 12 (3).
▷ This will make it possible to provide fast and accurate service.
▶ Leave the appliance plugged in until customer service arrives.
▷ The food will stay cold for longer.
▶ Pull out the plug (do not tug on the connection cable here) or switch off the circuit breaker.

7 Faults

Your appliance is designed and manufactured so that it will operate safely and will have a long service life. Nevertheless, if a fault should occur during operation, please check whether the fault is due to incorrect operation. In this case we must charge you for any costs incurred, also within the guarantee period.

Normal noises in the appliance:

Running noise due to speed-regulated compressors.
A bubbling or splashing sound from the coolant flowing through the coolant circuit.

* according to model and design

A quiet clicking, when the cooling unit (motor) switches itself on and off automatically.

Brief humming noise, slightly louder:

- When the motor switches on, when SuperFrost is switched on, if fresh food has been recently stored or the door has been open for a long period, the freezing capacity automatically increases.
- High ambient temperature (s. 1.2)

Deep humming - Noise of air flowing through the fan.

The compressor runs for a long time:

- It switches to a lower speed when it requires a lower cooling capacity, to save energy.
- SuperFrost is switched on.

A LED on the bottom rear of the appliance (at the compressor) flashes regularly every 15 seconds*.

- The inverter is equipped with a diagnostic LED.
- The flashing is normal.

External surfaces warm. The heat from the cooling circuit is used to avoid condensate.

Faults that you can remedy yourself:

The appliance does not function:

- The appliance is not switched on.

▶ Plug the plug into the mains socket correctly, check fuse

Vibration noises, if the appliance is not set up firmly on the floor.

▶ Align the appliance with the adjustable feet.

Temperature is not cold enough:

- Appliance door is not fully closed.

▶ Close appliance door.

- Ventilation and aeration insufficient.

▶ Clear and clean the ventilation grille.

- High ambient temperature

▶ see 1.2.

- Excessive quantity of fresh food stored without actuating SuperFrost.

▶ see 5.6.4.

- The appliance was opened too frequently or for too long.

▶Wait to see if the appliance goes back to the required temperature by itself. If not, contact customer services (see maintenance).

- Temperature set incorrectly.

▶ Set colder and check after 24 hours.

- Appliance is set up too close to a heat source.

▶ Change the location of the appliance or adjust the heat source.

The interior light does not light up.

- Appliance is not switched on.

▶ Switch on the appliance.

- The door was open for longer than 15 minutes.

▶ Interior light switches off automatically if the door stays open for approx. 15 minutes.

Icing up or condensate forming.

- The door seal may have also slipped out of its groove.

▶ Check the door seal.

With the following faults, contact customer service:

- The door seal is defective or requires replacement for another reason. Door seal exchangeable.
- DEMO is shown in the temperature display.
- LED lighting is defective or the cover is damaged.

WARNINGS:

Danger of injury due to electric shock!

Live parts are located beneath the cover.

- The LED interior lighting must be replaced or repaired by customer service or trained specialist personnel only.

Danger of injury by LED lamp!

The light intensity of the LED lighting corresponds to laser class 1/1M.

If the cover is defective:

- Do not look directly into the lighting with optical lenses at close proximity. This can cause injury to the eyes.

8 Shutting your appliance down

EN

8.1 Switching off the appliance

Note

▶ To switch off the entire appliance you only need to switch off the freezer section. The fridge section is automatically switched off with it.

8.1.1 Switching off the freezer section

▶ Press On/Off button for the freezer section Fig. 11 (9) for at least 3s.

▷ The temperature displays are dark. The entire appliance is switched off.

8.1.2 Switching off the fridge section

▶ Press On/Off button for the fridge section Fig. 11 (1) for at least 3s.

▷ The interior lighting goes out.

▷ The temperature display of the fridge section is dark.

Note

▶ If only the fridge section is to be switched off, e.g. during holiday periods, always make sure that the temperature display for the freezer section is illuminated.

8.2 Shutting your appliance down

▶ Empty the appliance.

▶ Switch the appliance off (see “Shutting your appliance down”).



▶ Unplug the mains plug.

▶ Clean the appliance (see 6.2).

▶ Leave the door open, so that no unpleasant odours arise.

9 Disposing of the appliance



The appliance still contains some valuable materials and should be disposed of properly - not simply with unsorted household refuse. The old appliance must be properly and professionally disposed of in accordance with the local applicable regulations and legislation.

When transporting the old appliance do not damage the coolant circuit, so that the coolant inside (information on the type plate) and the oil do not leak out uncontrolled.

▶ Disable the appliance.

▶ Unplug the mains plug.

▶ Disconnect the connection cable

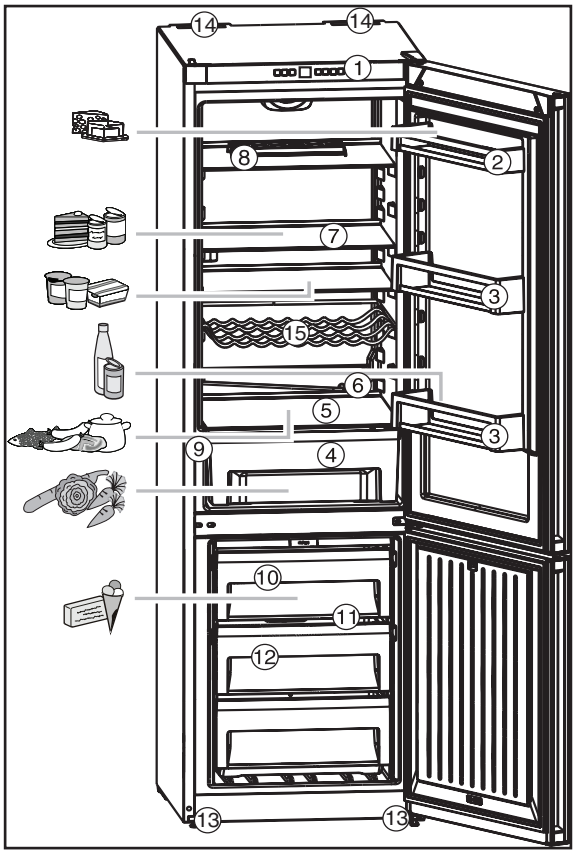

Fig. 1

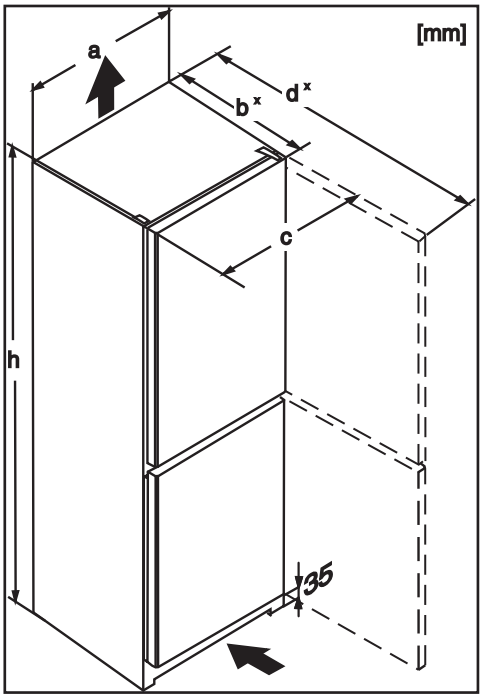

Fig. 2

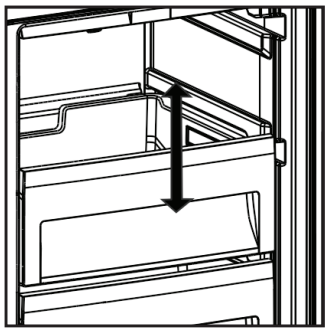

Fig. 3

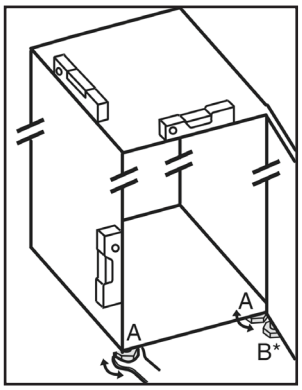

Fig. 4

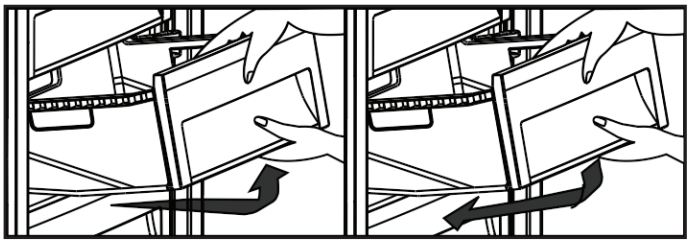

Fig. 5

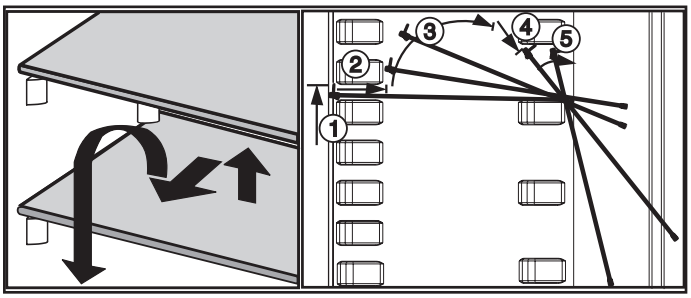

Fig. 6

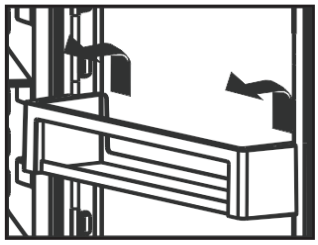

Fig. 7

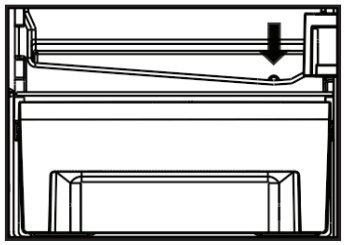

Fig. 8

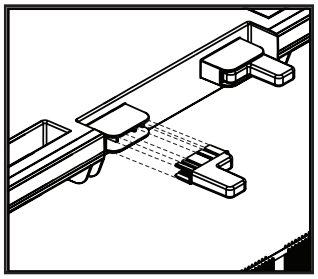

Fig. 9

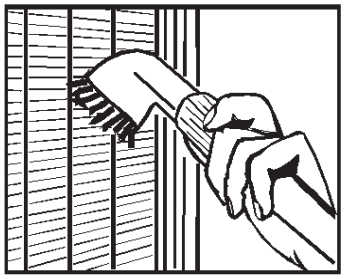

Fig. 10

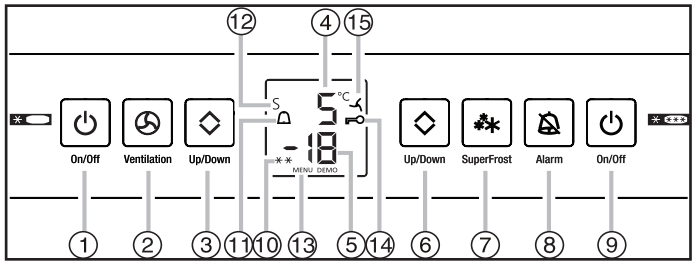

Fig. 11

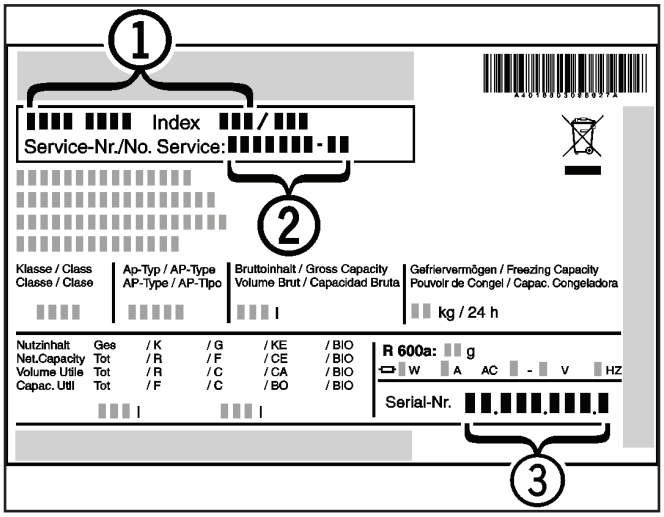

Fig. 12