Parts Included

Promethean

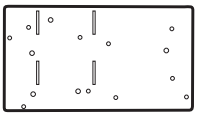

Adapter Plate



5- 4mm x 10mm PHMS



5- #10 Washers



4- 4mm x 12mm FHMS



4- 1/8" Spacers

Smart Board

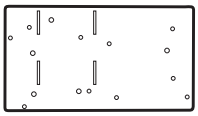

Adapter Plate



1/4 Fender Washer



1- 1/4-20 x 3/8" THMS



4- #10 Washers



4- 4mm x 12mm FHMS



4- 1/8" Spacer

Attaching to Promethean Arm

1 Attach the Adapter Plate

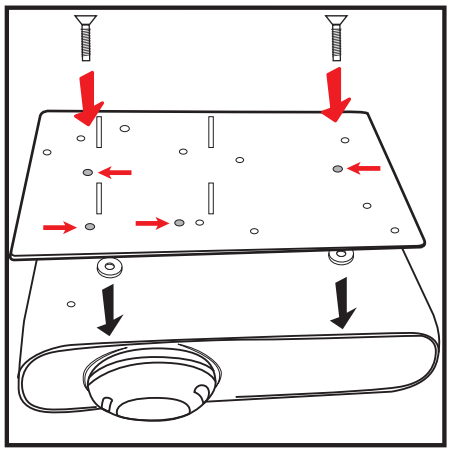

1. Place (4) spacers over the threaded inserts on the bottom of the projector. Attach Adapter Plate to Projector with (4) 4mm x 12mm FHMS

2 Attach Promethean Bracket

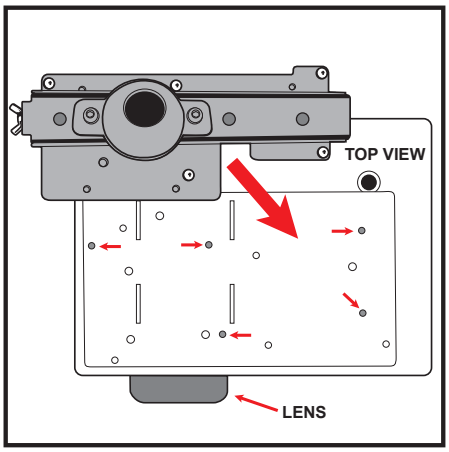

2. Attach Promethean Bracket to Adapter Plate with (5) 4mm x 10mm PHMS & (5) Washers

3 If Dome is not Centered

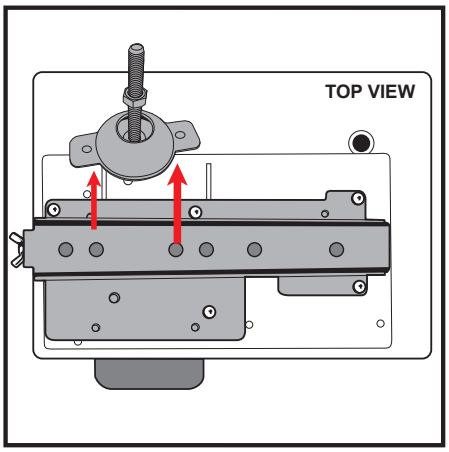

3. If dome is not centered with lens on installation, remove Dome from Promethean Bracket.

4 Align Dome to Len's Center

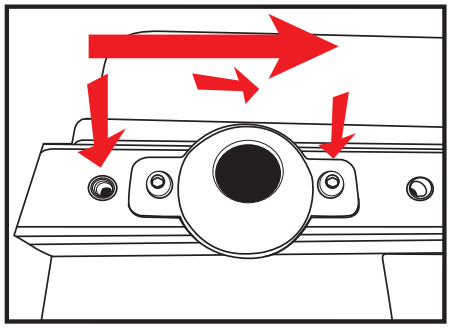

4. Replace Dome on next set of holes on the Promethean Bracket

5 Lens is Centered

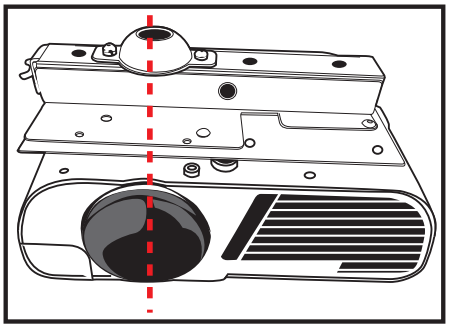

5. Dome is now directly over Projector Lens

Adapter Plate
Installation Instructions



ViewSonic®

ViewSonic Corporation
10 Pointe Drive
Brea, CA 92821

Attaching to Smart Arm

1 Attach the Adapter Plate

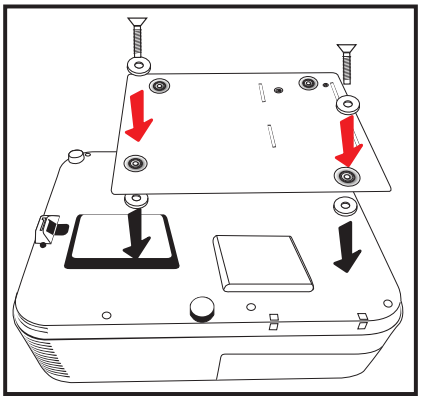

1. Place four spacers over the threaded inserts on the bottom of the projector.
2. Place Adapter Plate onto the bottom of projector, aligning mounting holes on bracket with threaded inserts on the bottom of projector, and line up with the center of the projector lens.

2 Screw in Adapter Plate

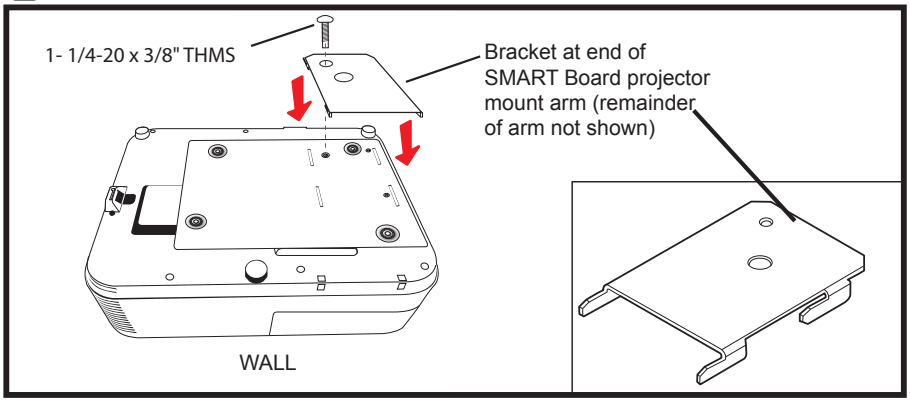

3. Attach Adapter Plate to Projector with (4) 4mm x 12mm FHMS
4. Lift Adapter Plate with projector up to end of the existing SMART Board projector mount arm, and slide interface bracket slots onto hooks.
5. Fasten interface bracket to end of SMART Board projector arm using one 1/4-20 x 3/8" THMS