ThinkStation P320 SFF 30BK0022**

Region
EMEA

Machine Type
30BK

TopSeller
TopSeller

Processor
Core i5-6500 4C/3.2GHz/6MB/65W/DDR4-2133

Graphics
Intel HD 530

Memory
1x8GB UDIMM DDR4-2400 Non-ECC

Disks
1x256GB SSD 2.5" SATA6Gbps Opal

M.2 Drives
None

Optical
HH DVD±RW

Media Reader
9-in-1

Power Supply
210W Bronze Fixed

Optional Ports
Serial

Keyboard / Mouse
USB / USB Opt

Operating System
Windows 10 DG Windows 7 Pro 64

Warranty
3-year, Onsite

Global
No

End of Support
Sep 26, 2022

Ann Date (mm/yy)
09/17

Note:
Country Code "US" is for United States, "++" is for EMEA countries (e.g. AD - Saudi, Arabia, AT - Austria, BM - Bulgaria, etc.), "xx" is for EAST countries (e.g. BM - Bulgaria, CX - Hungary, CY - Cyprus, etc.), and "**" is for MEA countries (e.g. AD - Saudi, Arabia, ED - Egypt, EQ - Sweden, etc.). Please be aware that the EMEA/ EAST/MEA models listed above might not be available in all countries

www.lenovo.com

This publication was developed for products and services offered in the United States and E.M.E.A countries. Lenovo may not offer the products, services or features discussed in this document in other countries. Lenovo may withdraw an offering at any time. Information is subject to change without notice. Consult your local representative for information on offerings available in your area. Lenovo reserves the right to change specifcations or other product information without notice. Lenovo is not responsible for photographic or typographical errors. Lenovo provides this publication “as is” without warranty of any kind, either express or implied, including the implied warranties of merchantability or ftness for a particular purpose.

http://psref.lenovo.com
Visit psref website for the latest version of Product Specifcations Reference.

© Lenovo, 2017. All rights reserved.



ThinkStation P320 SFF Platform Specifications

Product Specifications Reference (PSREF)

Components	Specification
Chipset	Intel C236 Chipset
Intel AMT	Intel Active Management Technology 11 on Xeon models, Intel Standard Manageability on other models
Processor	One Intel "Kabylake" or "Skylake" processor as listed: "Kaby Lake" Xeon E3-1280 v6 – 4C/3.9GHz/8MB/72W/DDR4-2400 Xeon E3-1275 v6 – 4C/3.8GHz/8MB/73W/DDR4-2400 Xeon E3-1270 v6 – 4C/3.8GHz/8MB/72W/DDR4-2400 Xeon E3-1245 v6 – 4C/3.7GHz/8MB/73W/DDR4-2400 Xeon E3-1240 v6 – 4C/3.7GHz/8MB/72W/DDR4-2400 Xeon E3-1230 v6 – 4C/3.5GHz/8MB/72W/DDR4-2400 Xeon E3-1225 v6 – 4C/3.3GHz/8MB/73W/DDR4-2400 Xeon E3-1220 v6 – 4C/3GHz/8MB/72W/DDR4-2400 Core i7-7700 – 4C/3.6GHz/8MB/65W/DDR4-2400 Core i5-7600 – 4C/3.5GHz/6MB/65W/DDR4-2400 Core i5-7500 – 4C/3.4GHz/6MB/65W/DDR4-2400 Core i5-7400 – 4C/3GHz/6MB/65W/DDR4-2400 Core i3-7300 – 2C/4GHz/4MB/51W/DDR4-2400 Core i3-7100 – 2C/3.9GHz/3MB/51W/DDR4-2400 "Skylake" Xeon E3-1245 v5 – 4C/3.5GHz/8MB/80W/DDR4-2133 Xeon E3-1240 v5 – 4C/3.5GHz/8MB/80W/DDR4-2133 Xeon E3-1230 v5 – 4C/3.4GHz/8MB/80W/DDR4-2133 Xeon E3-1225 v5 – 4C/3.3GHz/8MB/80W/DDR4-2133 Xeon E3-1220 v5 – 4C/3GHz/8MB/80W/DDR4-2133 Core i7-6700 – 4C/3.4GHz/8MB/65W/DDR4-2133 Core i5-6500 – 4C/3.2GHz/6MB/65W/DDR4-2133 Core i5-6400 – 4C/2.7GHz/6MB/65W/DDR4-2133 Core i3-6100 – 2C/3.7GHz/3MB/51W/DDR4-2133
Memory DIMM slots	4 DIMM slots, 2-channel (integrated memory controller in processor)
Memory type/capacity	Up to 64GB ECC/non-ECC (4 x 16GB), DDR4-2400. UDIMM. "Skylake" processor supports up to DDR4-2133. Core i7 and i5 processors cannot support ECC.
Intel HD Graphics in processor	Integrated Intel HD P530 in Xeon E3-12x5 v5 processors, or Intel HD P630 in Xeon E3-12x5 v6 processors, or Intel HD 530 in Core i7, i5, or i3 6000 processors. or Intel HD 630 in Core i7, i5, or i3 7000 processors. Works along with discrete graphics to support multi-display, enables three display connectors (2 DP, 1 VGA) on rear.
Discrete graphics	Two PCI Express 3.0 x16 slots for graphics adapters. Up to two NVIDIA Quadro P1000. Supports the following NVIDIA graphic adapters: Adapter / Cores / Memory / Power / Connector NVS 310 / 48 / 1GB / 19.5W / 2xDP NVS 315 / 48 / 1GB / 19.5W / 2xDVI-I SL/2xDP NVS 510 / 192 / 2GB / 33.4W / 4xmini DP Quadro P400 / 256 / 2GB / 30W / 3xminiDP Quadro P600 / 384 / 2GB / 40W / 4xminiDP Quadro P1000 / 640 / 4GB / 47W / 4xminiDP
Onboard drive controller	Five onboard SATA 6.0Gb/s connectors for optical and disk drives plus one SATA connector for optional eSATA. RAID 0, 1, 5* support ** RAID 5 needs three 2.5" SSD drives.*
Drive Bays	One external 5.25" bay, one internal 3.5" bay (see right). Up to one 9mm optical + 2 x 3.5" disk drive bays + 1 x 2.5" disk drive bay + two M.2 NVMe SSD
Supporting disk drives	3.5" SATA HDD (7.2K 6Gbs) – 1TB/2TB/4TB/1TB hybrid/2TB hybrid 2.5" SATA SSD (6Gbs) – 256GB Opal/512GB/512GB Opal/1TB Opal/2TB opal M.2 NVMe SSD, via PCIe adapter – 256GB Opal/512GB Opal/1TB Opal, via PCIe 3.0 x4 adapter, up to 2; or 16GB Intel Optane Memory, PCIe 3.0 x2
Max internal storage	10TB (2 x 4TB 3.5" HDDs + 1 x 2TB 2.5" SSD) plus two 1TB M.2 NVMe SSD
Media reader	9-in-1 card reader. Optional 29-in-1 card reader on selected models
Power supply	210 watts with variable speed fan, autosensing, Climate Savers Computing Bronze, 80 PLUS Bronze qualified
Onboard Ethernet	One onboard gigabit ethernet, Intel I219LM, supports Wake-on-LAN
HD Audio	Realtek ALC662 codec
TPM	Standard, TCG 2.0-compliant

Components	Specification
Front ports	Two USB 3.0, microphone (3.5mm), headphone (3.5mm)
Rear ports	1 VGA and 2 DisplayPort (for Intel HD Graphics models only), two USB 2.0, four USB 3.0, one serial (9-pin), one ethernet (RJ-45), three analog audio ports (line-in, line-out, mic-in)
Mechanical	• Raven black color; metal case • 4.02"W x 15.53"D x 13.31"H • 102mm W x 394.5mm D x 338mm H • 17.2 lb (7.9kg) max configuration • 12.9-liter
Environmental certifications	GREENGUARD certified/RoHS-compliant/EPEAT Gold rating/ ENERGY STAR 6.1 qualified
Limited warranty	1 or 3-year limited onsite service with 9x5/NBD. Some parts are Customer Replaceable Units.
ISV certifications	Please visit www.thinkworkstations.com/isv-certifications/

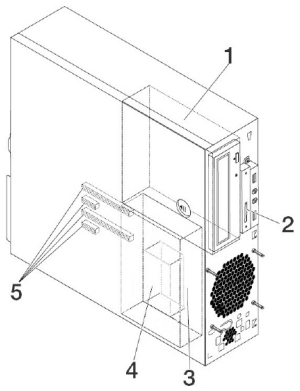

Drive Bays and PCIe Slots

Bay 1	5.25", supports one of the following: HH optical/flex module***/9mm optical+3.5" HDD bay/ 3.5" HDD bay/Front Access Storage Enclosure **** Flex module supports one or more of the following: 9mm optical/ 29-in-1 reader/front IEEE 1394/front eSATA. Up to one flex module is supported per system.*
Bay 2	Optional 9-in-1 single slot reader
Bay 3	Standard 3.5" HDD bay
Bay 4	Optional 2.5" HDD bay (under Bay 3)
5 -Slots	Four PCIe slots (top-down): Slot 1: Low Profile, PCIe 3.0 x16 (near CPU) Slot 2: Low Profile, PCIe 3.0 x1 Slot 3: Low Profile, PCIe 3.0 x16 (x4 elec) Slot 4: Low Profile, PCIe 3.0 x1

© Copyright Lenovo 2017. All rights reserved.

ThinkStation P320 SFF











