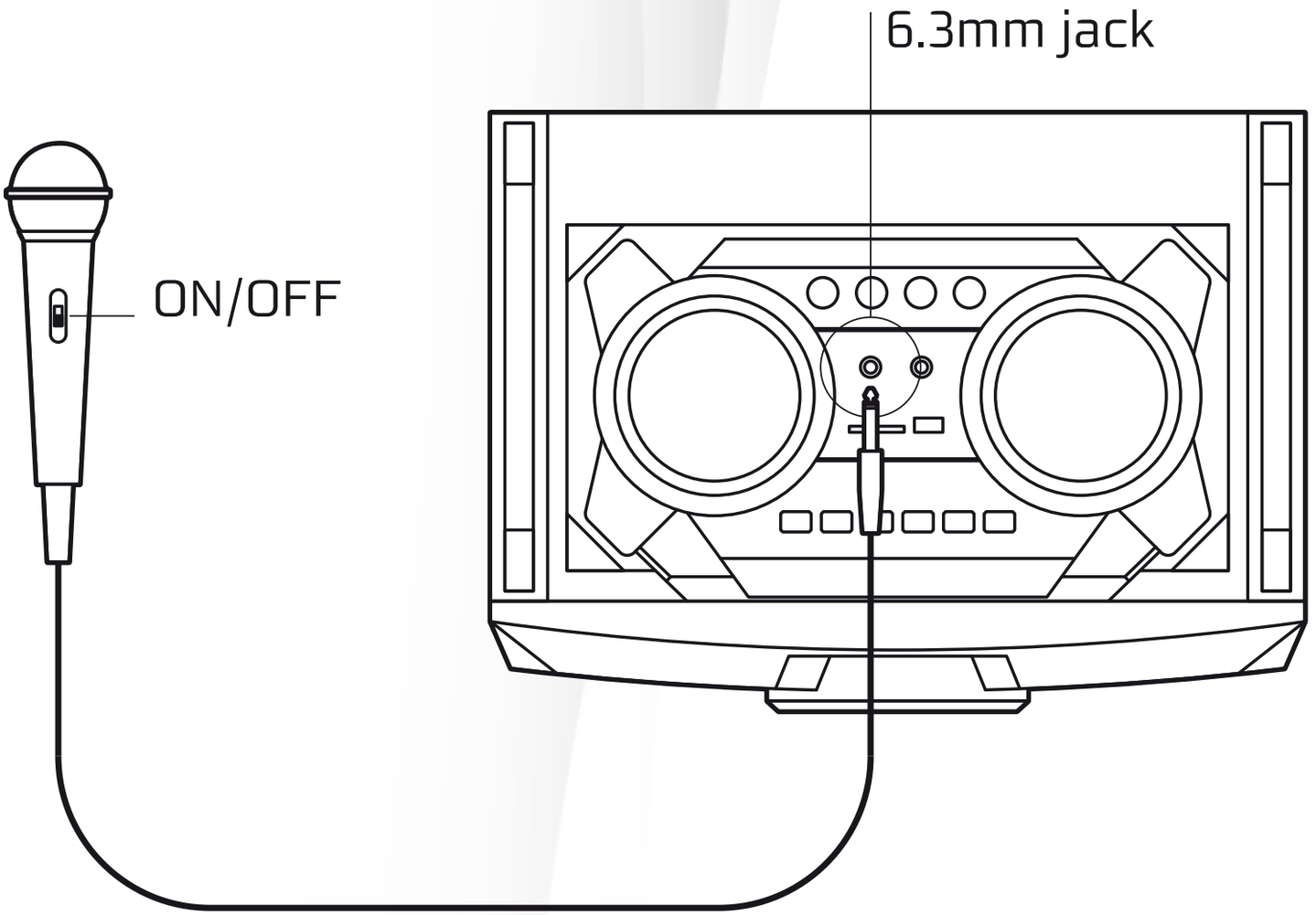

SINGER FIRE

WIRED MICROPHONE FOR KARAOKE