Brief instructions

AEG
perfekt in form und funktion

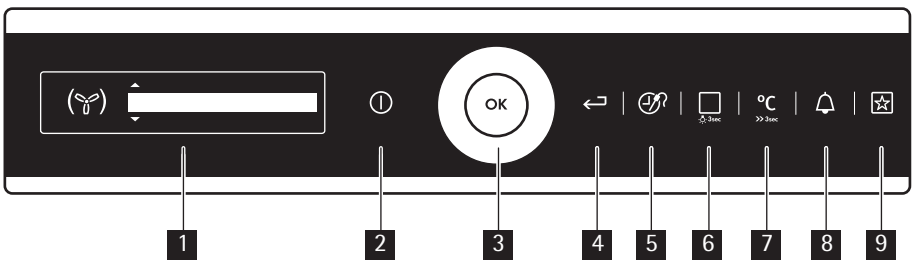

Sensor field

1. Display
2. On/off
3. Shuttle and OK key
4. Home key - opens the main menu
5. Time and additional functions
6. Heating Functions or Assisted Cooking menu
7. Temperature selection
8. Minute Minder
9. Favourite Programme

Heating Functions Assisted Cooking

Press once or twice - activates a Heating Function or an Assisted Cooking function. Press and hold for 3 seconds - activates or deactivates the oven lamp.

Fast heat up

Press and hold for 3 seconds - turns Fast Heat Up function on and off.

Favourite Programme

Press once - opens Favourite Programme menu. Press and hold for 3 seconds - saves active function in Favourite Programme menu.

Heating Functions

Press once

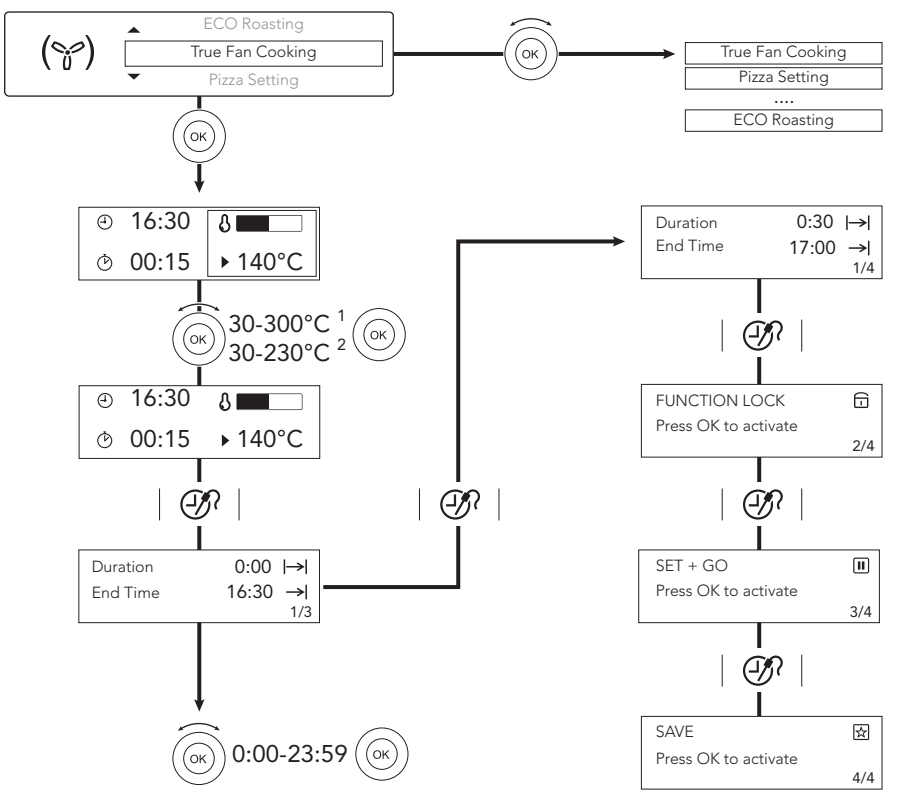

[1] Ovens without steam only
[2] Ovens with steam only

Oven

- True Fan Cooking
- Pizza Setting
- Slow Cook
- Conventional Cooking
- Frozen Foods
- Turbo Grilling
- Fast Grilling
- Grilling
- Moist Fan Baking
- Keep Warm
- Defrost
- Bottom Heat
- Dough Proving
- Bread baking
- Au Gratin
- Preserving
- Drying
- Plate Warming
- ECO Roasting

Steam Oven

- Full Steam
- Half Steam + Heat
- Quarter Steam + Heat
- ECO Steam
- Moist Fan Baking
- True Fan Cooking
- Pizza Setting
- Slow Cook
- Conventional Cooking
- Frozen Foods
- Turbo Grilling
- Fast Grilling
- Grilling
- Keep Warm
- Defrost
- Bottom Heat
- Dough Proving
- Bread baking
- Au Gratin
- Preserving
- Drying
- Plate Warming
- Steam Regenerating
- ECO Roasting

Assisted Cooking

Press twice

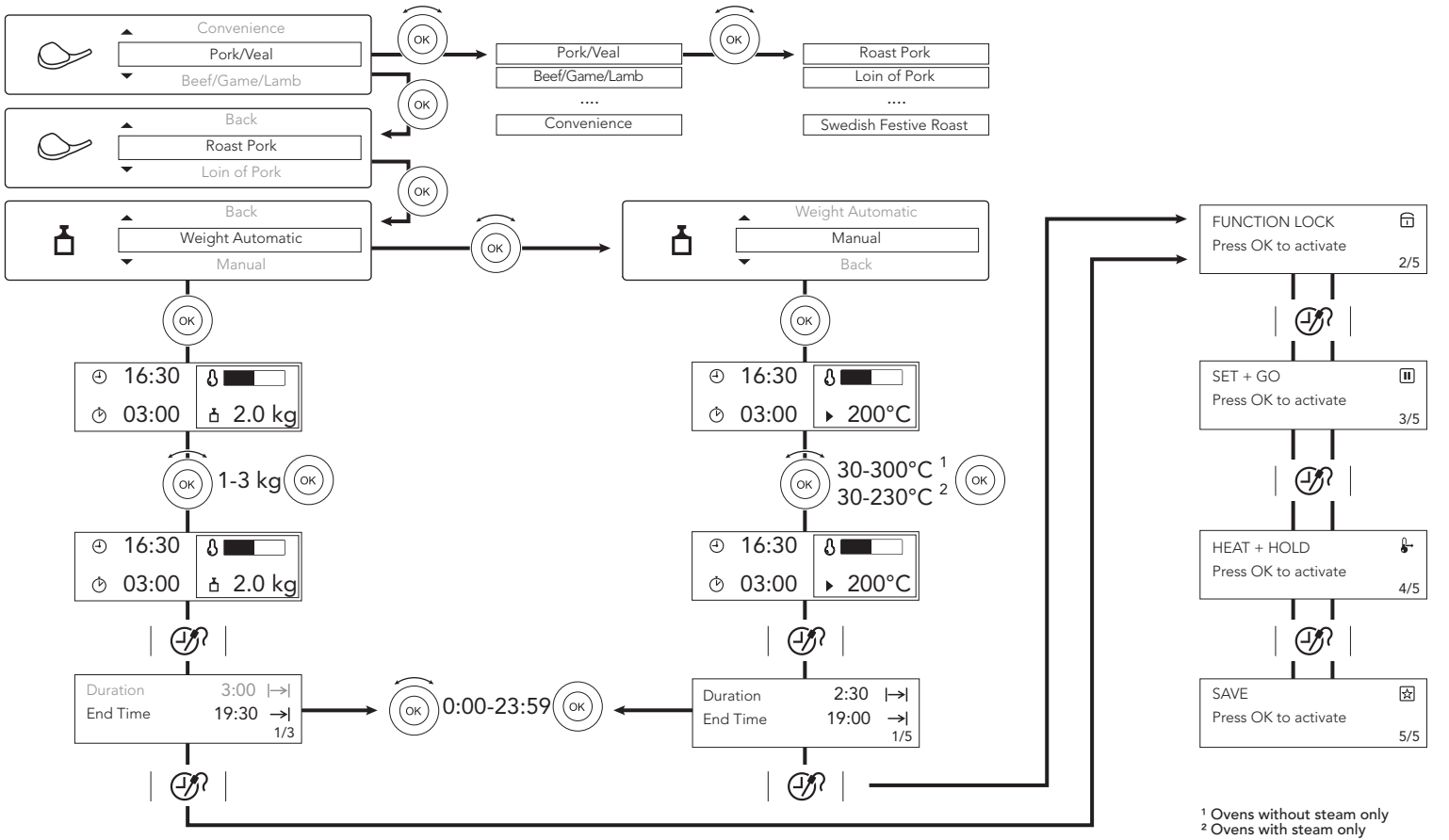

[1] Ovens without steam only
[2] Ovens with steam only

Assisted Cooking

Pork/Veal

Roast Pork
Loin of Pork
Pork Knuckle
Pork Shoulder
Roast Veal
Veal Knuckle
Ossobuco
Stuffed Veal Breast
Meat Loaf
Swedish Festive Roast [1]

Beef/Game/Lamb

Roast beef
Scandinavian Beef
Braised meat
Marinated Beef
Loin of Game
Roast Game
Rabbit
Mustard Rabbit
Wild Boar
Roast Lamb
Lamb Joint, medium
Leg of Lamb

Poultry

Chicken, whole
Turkey, whole
Duck, whole
Goose, whole
Boned Poultry
Chicken Legs
Coq au Vin
Roast Duck with Orange
Stuffed Chicken
Stuffed Chicken Breast [2]

Fish

Whole Fish
Fillet of Fish
Cod Fish
Fish in Salt
Stuffed Calamari
Steamed Fish
Jansons Temptation
Poached Fish (Trout) [2]

Cake

Lemon Sponge Cake
Swedish Cake
Biscuit
Cheese Cake
Fruit Cake
Streusel Cake
Rich Yeast Plait
Yeast Plait
Ring Cake
Savarin Cake
Brownies
Muffins
Sweet Tart
Carrot Cake
Almond Cake
Fruit Tart
Grandmas RoastApple Cake [1]

Desserts [2]

Flan Caramel
Coconut Pudding
Cappuccino Cake
Cherry Pie
Plum Dumpling

Pizza/Pie/Bread

Pizza
Onion Tart
Quiche Lorraine
Goatscheese Flan
Cheese Flan
Cheese Pastry
White Bread
Farmer Bread
Pierogi

Casseroles/Gratins

Lasagne
Cannelloni
Potato Gratin
Moussaka
Pasta Gratin
Chicory Gratin
Beef Casserole
Cabbage Casserole
Franconian Dumpling Pan [1]

Side Dishes [2]

Vegetables, mediterranean
Vegetables, traditional
Peeling Tomatoes
Potatoes in their jacket
Boiled Potatoes
Salty Dumplings
Rice
Egg Custard

Combi Steaming [2]

Steam Menu 1
Steam Menu 2
Steam Menu 3

Convenience

Pizza, frozen
Pizza American, frozen
Pizza, chilled
Pizza Snacks, frozen
French Fries
Wedges/Croquettes
Hash Browns
Bread/Rolls
Bread/Rolls, frozen
Apple Strudel, frozen
Fillet of Fish, frozen
Chicken Wings
Lasagne/Cannelloni, frozen

[1] Ovens without steam only
[2] Ovens with steam only

892949185-B-452012