MB20G

MOVEBAND Display

User Manual



TCL

Overview

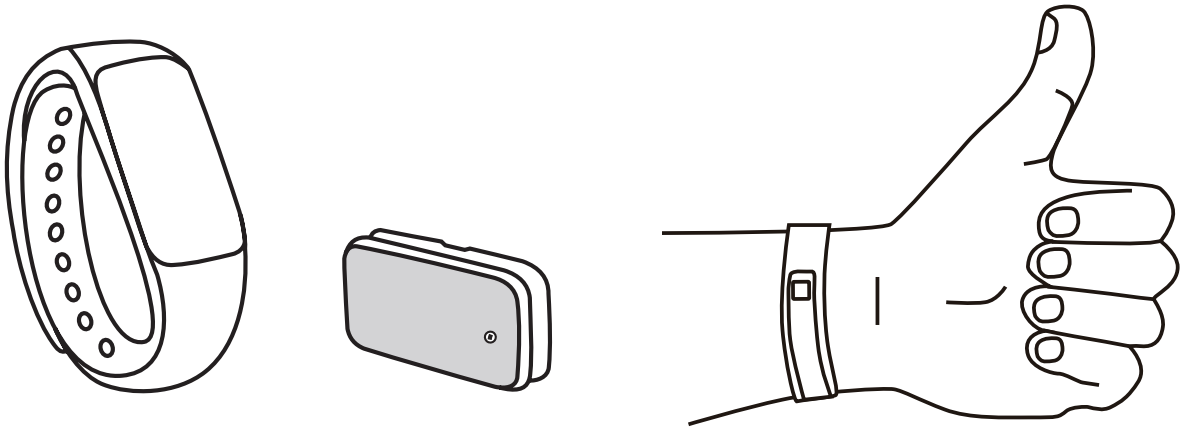

Features

- Track daily fitness activity including steps taken, distance covered, calories burned, etc.
- Track sleep quality including hours slept, time taken to fall asleep, wake-up times, etc.
- Reminders to push you move when you have been sedentary for too long.
- In depth data analysis and customised targets.
- Ergonomic design, comfortable to wear.
- Simple synchronisation via Bluetooth.
- Up to five days of battery life.
- Splash proof.

Getting Started

Charging

Remove the MOVEBAND Display from the wristband and place inside the charging dock. Plug the USB port into a computer or USB charger for power.

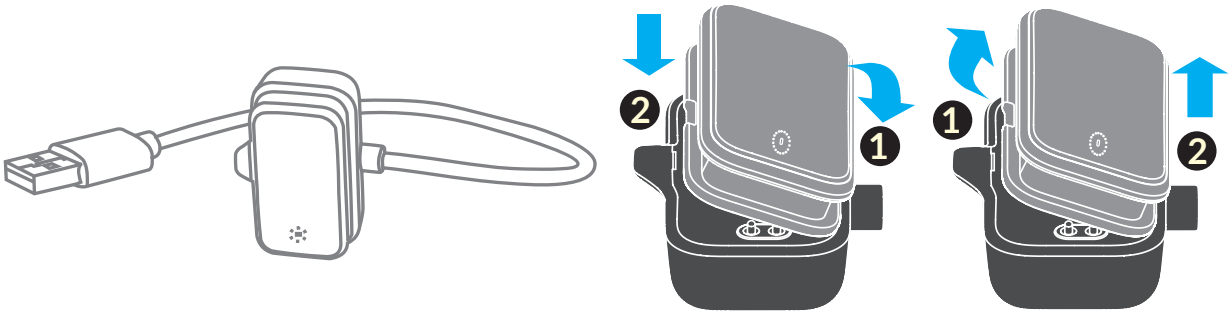

Charging

Charge complete

Notes:

- Following air regulation, the battery of your product is not charged. Charge it first before using.
- If the charging port is corroded or dirty, it will seriously affect the charging process. After playing sports, wipe away any sweat or dirt from your band before charging.

Battery Status

When power is ≤10%, your band will vibrate 3 times to remind you to charge.

When power is =100%, your band will vibrate 3 times to notify you that charging is complete.

Download and install the application

Long press the touch button for 3 seconds to power on. Scan the QR code to download and install the application.

Launching the application

Connection

1. Turn on Bluetooth.
2. Touch the App icon. After the introduction interface, touch "Experience now" to enter the Home page.
3. Select "Tracker mode" and click "Pair device". A dialog box will then appear on your device and simultaneously 6 digits will appear on the screen of your MOVEBAND Display. Input the 6 digits and then click "Pair".
4. Once paired successfully, the date, battery status, fitness activity status and sleep status will display on your band.

Login

Click  to enter the user interface, then click  to create an account to log in.

Friends

Add friends registered in the same group and invite friends from your phone contacts.

Device configuration

Configure the time display, alarms and notification settings.

Remind

Clock alarm: Click  to set your clock.

Remind: Set reminders to push yourself to get up and get active.

Settings

Start up mode: Select phone mode or tracker mode.

Equipment pairing: Search and pair tracker.

Updates: Hardware updates.

App updates: Updates for App.

Contact us: Display contact information.

Feedback: Send your feedback to supplier.

Tracker mode

Sport monitoring

Click 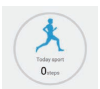 to check distance covered, steps taken, time taken, calories burnt and targets.

Click "Set Target" to set your goal of steps and distance.

Daily data: Shows 1 day's data. (Click ⊖ 1 time.)

Weekly data: Shows 7 days' data. (Click ⊖ 2 times.)

Monthly data: Shows daily data/weekly data (optional). (Click ⊖ 3 times.)

Sleep monitoring

Click 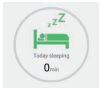 to check your sleep status.

Sleep cycle: Monitor your sleep cycle automatically and record the quality of your sleep, such as deep, light and awake.

Daily data: Shows 1 day's data. (Click ⊖ 1 time.)

Weekly data: Shows 7 days' data. (Click ⊖ 2 times.)

Monthly data: Shows daily data/weekly data (optional). (Click ⊖ 3 times.)

Phone mode

Slide "Slide to begin", and your MOVEBAND Display will record distance, times, calculate speed etc.

Click "Set target" to set and save your sport target.

Click  to check distance covered, time taken and calories burned.

Daily data: Shows 1 day's data. (Click ⊖ 1 time.)

Weekly data: Shows 7 days' data. (Click ⊖ 1 times.)

Monthly data: Shows daily data/weekly data (optional). (Click ⊖ 2 times.)

Click  to share your sports information through Facebook or Twitter.

Band Function

When you tap:

Once: The time is displayed.



Twice: The date is displayed.



Three times: The number of steps taken is displayed.



Four times: The distance covered is displayed.



Five times: The number of calories burned is displayed.



Certification

WEEE Approval

This device is in compliance with the essential requirements and other relevant provisions of the Waste Electrical and Electronic Equipment Directive 2012/19/EU (WEEE Directive).

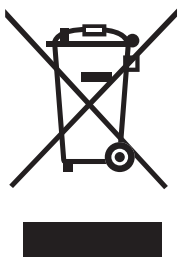

This symbol on device means that these products must be taken to collection points at the end of their life:

- Municipal waste disposal centres with specific bins for these items of equipment.

- Collection bins at points of sale.

They will then be recycled, preventing substances being disposed of in the environment, so that their components can be reused.

In European Union countries:

These collection points are accessible free of charge.

All products with this sign must be brought to these collection points.

In non European Union jurisdictions:

Items of equipment with this symbol are not to be thrown into ordinary bins if your jurisdiction or your region has suitable recycling and collection facilities; instead they are to be taken to collection points for them to be recycled.

CAUTION RISK OF EXPLOSION IF BATTERY IS REPLACED BY AN INCORRECT TYPE. DISPOSE OF USED BATTERIES ACCRDING TO THE INSTRUCTIONS

Following air regulation, the battery of your product is not charged. Please charge it first.

RoHs Approval

This device is in compliance with the restriction of the use of certain hazardous substances in electrical and electronic equipment Directive 2011/65/EU (RoHs Directive).

Licences

The Bluetooth word mark and logos are owned by the Bluetooth SIG, Inc. and any use of such marks by TCL Communication Ltd. and its affiliates is under license. Other trademarks and trade names are those of their respective owners.

TCL MB20G Bluetooth Declaration ID D031563

We hereby point out that the end user warranty for infringement IPR is solely limited to the EU.

If and to the extent that the Product is exported, taken with, or used by end customer or end user outside the EU any

responsibility, warranty or indemnification of manufacturer and its suppliers in regard to the Product expires (including any indemnification in regard to infringement IPR).

General information

- Internet address: www.tclcom.com/wearables/
- Hotline: See the “SERVICES” leaflet that came with your device or go to our website.
- Manufacturer: TCL Communication Ltd.
- Address: 5/F, Building22E, Science Park West Avenue, Hong Kong Science Park, Pak Shek Kok, Hong Kong.

On our website, you will find our FAQ (Frequently Asked Questions) section. You can also contact us by email to ask any questions you may have.

This radio equipment operates with the following frequency bands and maximum radio-frequency power:

Bluetooth: < 20 dBm

Hereby, TCL Communication Ltd. declares that the radio equipment type TCL MB20G is in compliance with Directive 2014/53/EU.

The full text of the EU declaration of conformity is available at the following internet address: http://www.tclcom.com/wearables/EU_doc.

The description of accessories and components, including software, which allow the radio equipment to operate as intended, can be obtained in the full text of the EU declaration of conformity at the following internet address: http://www.tclcom.com/wearables/EU_doc.

Warranty

The device is warranted against any deviation from technical specifications for a period of twelve (12)[1] months from the date specified on your original invoice.

Under the terms of this warranty, you must immediately inform your vendor in case of a conformity defect on this device, and present a proof of purchase.

The vendor or repair center will decide whether to replace or repair this device, as appropriate.

Repair or replacement of this device is warranted for ONE (1) month unless there are statutory provisions to the contrary.

This warranty shall not apply to damage or defects to this device due to:

1) Not following the instructions for use or installation.
2) Not being compliant with technical and safety standards applicable in the geographical area where this device is used.
3) Improper maintenance of sources of energy, and of the overall electric installation.
4) Accidents or consequences of theft of the vehicle in which this device is transported, acts of vandalism, lightning, fire, humidity, infiltration of liquids, inclement weather.
5) Connecting to or integrating into this device any equipment not supplied or not recommended by the manufacturer.

---

[1] The warranty period may vary depending on your country.

6) Any servicing, modification or repair performed by individuals not authorised by the manufacturer, the vendor or the approved maintenance centre.
7) Use of this device for a purpose other than that for which it was designed.
8) Malfunctions caused by external causes (e.g., radio interference from other equipment, power voltage fluctuations).
9) Faulty connections resulting from unsatisfactory radio transmission or caused by the absence of radio relay coverage.

Warranty is also excluded for this device on which markings or serial numbers have been removed or altered.

This device is also warranted against hidden defects (defects inherent in the design, manufacture, etc.).

There are no other express warranties than this printed limited warranty, expressed or implied, of any nature whatsoever.