Overview

HP Elite x2 1012 G1

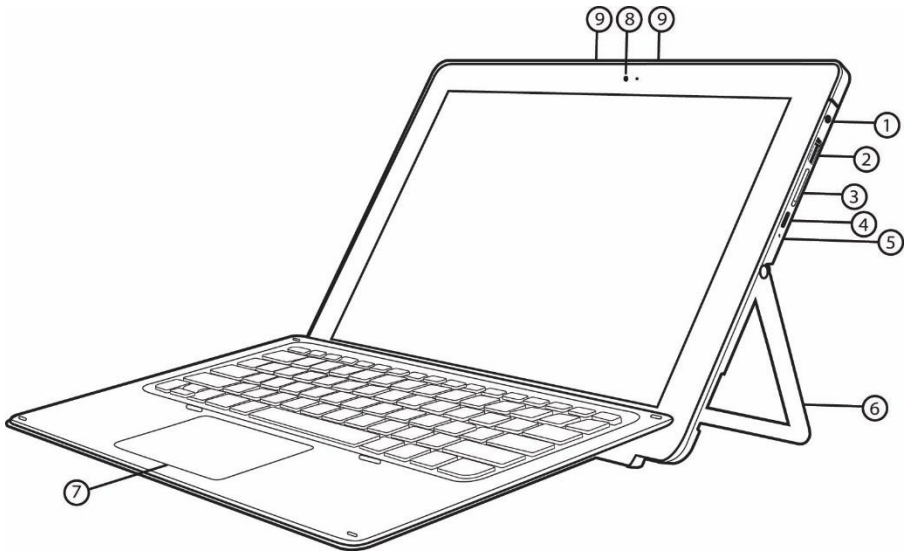

1. Combo Headset
2. USB A
3. SD Card Slot
4. USB Type-C™
5. Power LED
6. Kickstand
7. ClickPad
8. Front Camera
9. Microphones

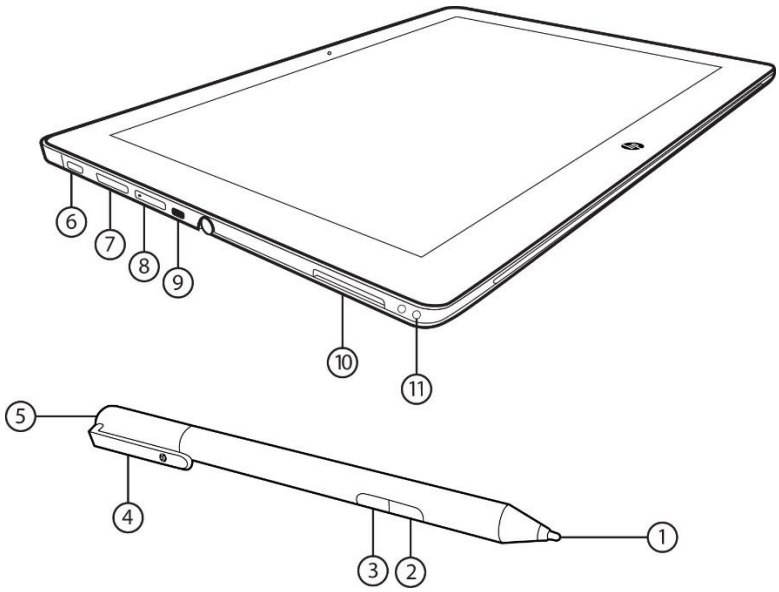

1. Tip
2. Erase
3. Select
4. Clip
5. Application Launch Button (Default OneNote)
6. Power
7. Volume Up/Volume down
8. SIM card slot
9. Lock Slot
10. There is no slot in there, it's just to open the kickstand.
11. Tether

Overview

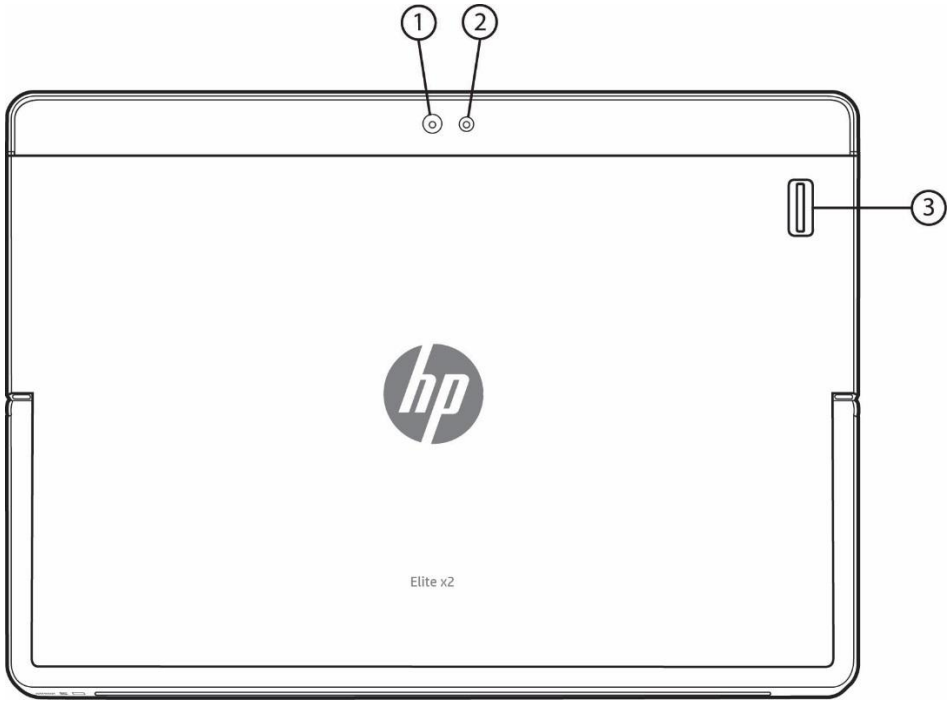

1. Camera
2. Camera Flash
3. Fingerprint Reader

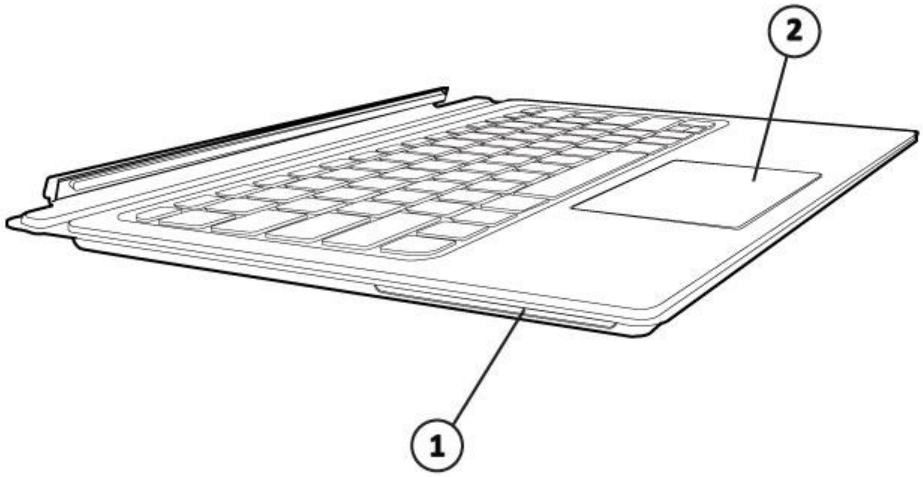

Advanced Keyboard

1. Smartcard Slot
2. ClickPad/NFC area

Overview

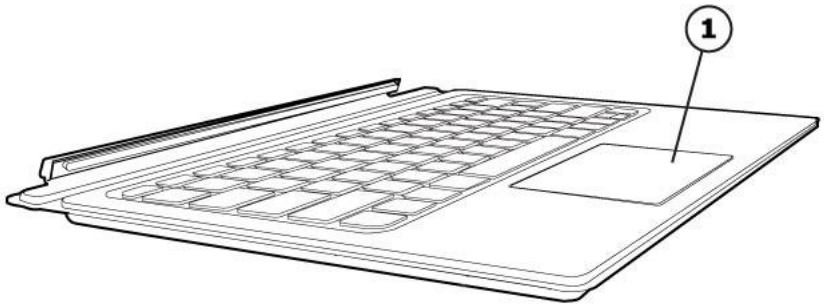

Travel Keyboard

1. ClickPad

At A Glance

- Designed for excellent mobility this stylish and thin 2-in-1 design is built to the standards of Elite durability
- Windows 10 versions, Web support for Windows 8.1
- 6th Generation Intel® Core™ M processors, some with vPro™ support[1]
- 12.0" diagonal ultra-slitm LED-backlit Full HD (1920 x 1280) Touch Screens
- Solid State Drives up to 512 GB
- Weight starting at 820g for Tablet
- Height starting at 8.05mm for Tablet
- Audio by Bang & Olufsen
- Dual microphone array with HP Advanced Noise Reduction Software
- Front and Back facing camera and webcam
- Supports a broad range of wireless broadband and Wi-Fi options for connectivity on the go
- Optimized security using industry standard technologies such as TPM2.0, optional integrated fingerprint reader and an optional smart card reader in the optional Advanced keyboard
- Protect your device and data using the latest HP security technology solutions: HP Sure Start, HP BIOSphere and HP Client Security.
- Standard commercial 1 year limited warranty with extended service available with optional HP Care Packs.

NOTE: See important legal disclosures for all listed specs in their respective features sections.

[1] vPro™ support not available on all configurations.

Technical Specifications

PRODUCT NAME

HP Elite x2 1012 G1

OPERATING SYSTEM

Preinstalled	Windows 10 Pro 64* Windows 10 Home 64*
Web-only Support	Windows 10 Pro 64 Windows 10 Home 64 Windows 10 Enterprise 64 Windows 8.1 Pro 64 Windows 8.1 64 Windows 8.1 Enterprise 64

* Not all features are available in all editions or versions of Windows. Systems may require upgraded and/or separately purchased hardware, drivers, software or BIOS update to take full advantage of Windows functionality. Windows 10 is automatically updated, which is always enabled. ISP fees may apply and additional requirements may apply over time for updates. See http://http://www.microsoft.com

PROCESSOR*

Intel® Core™ M processor, 6th Generation processors:

Intel® Core™ M7-6Y75 with Intel HD Graphics 515
(1.2 GHz, up to 3.1 GHz with Intel Turbo Boost Technology**, 4 MB cache, 2 cores), vPro™ Support

Intel® Core™ M5-6Y57 with Intel HD Graphics 515
(1.1 GHz, up to 2.8 GHz with Intel Turbo Boost Technology**, 4 MB cache, 2 cores), vPro™ Support

Intel® Core™ M5-6Y54 with Intel HD Graphics 515***
(1.1 GHz, up to 2.7 GHz with Intel Turbo Boost Technology**, 4 MB cache, 2 cores)

Intel® Core™ M3-6Y30 with Intel HD Graphics 515
(0.9 GHz, up to 2.2 GHz with Intel Turbo Boost Technology**, 4 MB cache, 2 cores)

* Multi-Core is designed to improve performance of certain software products. Not all customers or software applications will necessarily benefit from use of this technology.. Performance and clock frequency will vary depending on application workload and your hardware and software configurations. Intel's numbering is not a measurement of higher performance.
** Intel® Turbo Boost technology requires a PC with a processor with Intel Turbo Boost capability. Intel Turbo Boost performance varies depending on hardware, software and overall system configuration. See www.intel.com/technology/turboboost for more information.
***Available for SMB store and Channel only. Not recommended for corporate enterprise deployments.

CHIPSET

Integrated with processor

Technical Specifications

GRAPHICS

Intel® HD Graphics 515

DISPLAY

Internal

Touch screen

12.0" diagonal LED-backlit BV UWVA eDP 1.3 Ultra-slim (1920 x 1280 – Full HD*) Touch screen
Chemically-strengthened Corning® Gorilla® Glass 4 top cover directly bonded to display

Refresh Rate	60 Hz	
Brightness	340 nits (typical)	
Pixel Resolution	Format	1920 x 1280 (WUXGA+)
	Configuration	RGB Stripe
Interface	eDP 1.3	
LCD Mode	IPS/FFS/VA	
PPI	192 ppi	
Viewing Angle	UWVA 85/85/85/85 (Left/Right/Down/Up)	

External

Up to 3840 x 2160 @ 60hz for a single display, lower with additional displays connected (DisplayPort), HDMI from the side adapter is limited to 1920 x 1080@60Hz

24-bit + 8 bit alpha channel (standard)

Up to 30-bit per pixel color depth (Wide Color Gamut)

* HD content required to view HD images.

NOTE: Resolutions are dependent upon monitor capability, and resolution and color depth settings.

STORAGE AND DRIVES

Internal Storage*

Supports M.2 SSD SS 2280
128 GB SATA III Solid State Drive
180 GB SATA III Solid State Drive
180 GB SATA III SED OPAL2 Solid State Drive
256 GB SATA III Solid State Drive
256 GB SATA III Solid State Drive NVMe
256 GB SATA III SED OPAL2 Solid State Drive
512 GB SATA III Solid State Drive

* For SSD's, GB=1 billion bytes. TB=1 trillion bytes. Actual formatted capacity is less. Up to 16 GB (for Windows 7) and up to 30 GB (for Windows 8 and 10) of system disk is reserved for system recovery software.

Expansion Storage

Micro SD Media Reader Slot - Supports microSD, microSDHC, microSDXC, supporting expansion up to 200GB

MEMORY

LPDDR3-1866 (Transfer rates up to 1866 MT/s)
Supports Dual Channel Memory
Soldered Down

Standard
4 GB Total System Memory
8 GB Total System Memory

Maximum
Up to 8 GB

NETWORKING/COMMUNICATIONS

Wireless
Support for a broad range of secure, integrated wireless LAN and wireless WAN options featuring support for the latest industry standards. Broadband Wireless (WWAN) requires a Windows operating system and is available in select countries as a standard, factory configurable feature only. Integrated Bluetooth is also available (factory configurable only) and is supported via combo card.

Wireless WAN (WWAN)*

HP hs3110 HSPA+ Intel® Mobile Broadband*
HP lt4120 Qualcomm® Snapdragon™ X5 LTE Mobile Broadband*
HP lt4225 LTE/EV-DO Gobi™ 4G Mobile Broadband*
HP lt4226 LTE/HSPA+ Gobi™ 4G Mobile Broadband*

Wireless LAN (WLAN)**

Intel® Dual Band Wireless-AC 8260 802.11a/b/g/n/ac (2x2) WiFi and Bluetooth® 4.2 Combo;
Intel® Tri Band Wireless-AC 18260 802.11a/b/g/n/ac (2x2) and Bluetooth® 4.2 + WiGig Combo;

* WWAN is an optional feature and requires factory configuration. WWAN connection requires wireless data service contract, network support, and is not available in all areas. Contact service provider to determine the coverage area and availability. Connection speeds will vary due to location, environment, network conditions, and other factors. 4G LTE not available on all products, in all regions
**Wireless access point and Internet service is required and is not included. Availability of public wireless access points limited.
***The WiGig-compatible notebook or tablet must be positioned within 1.2 m (4 ft) and without obstruction in the line of sight of the wireless dock. HP Advanced Wireless Docking is compatible with the HP Elite x2 1012 G1 with an optional installed Intel Tri Band Wireless AC with WiGig Combo card available at the time of purchase.

AUDIO/MULTIMEDIA

Audio
Audio by Bang & Olufsen
Dual speakers (top facing)
Dual microphone array with echo cancellation, noise suppression
Headphone line-out and microphone-in (combo)
HP Advanced Noise Reduction Software

Camera – Front
Integrated 2 MP (1080p)

- 1080p format for video
- 2 MP for still capture
- Supports videoconferencing* and still image capture
- High quality fixed focus lens
- Video capture at various resolutions up to 1920x1080 resolution (1080p) and up to 30 fps

- M-JPEG compression supports higher frame rates for video capture and videoconferencing*
- Improved low light sensitivity
- Improved dynamic range

Camera – Back
Integrated 5 MP (1080p)

- 1080p format for video
- 5 MP for still capture
- Supports videoconferencing* and still image capture
- High quality auto focus lens
- Video capture at various resolutions up to 1920x1080 resolution (1080p) and up to 30fps
- M-JPEG compression supports higher frame rates for video capture and videoconferencing*
- Improved low light sensitivity
- Improved dynamic range

* Internet access required.

ACTIVE PEN

HP Active Pen with Bluetooth® App Launch

Pen Technology	Wacom
Digitizer	N/A, shared with touch
Dimensions	147.29 x 9.5 mm
Weight	17.5 g
Power	N/A
System Requirements	Windows7/8/8.1/10
Tip Diameter	1 mm
Pressure Sensitivity (Y/N)	Yes (2048 levels)
Buttons (Y/N)	Yes, 3
Screen DPI	N/A
Hover Capability (Y/N)	N/A
Hover Height (mm)	Yes
Off Screen Writing Supported (Y/N)	8 mm+
Palm Rejection (Y/N)	No
Tilt Angle (Y/N)	Yes
3D Input Support (Y/N)	As much as you can tilt
Battery Life Based on Continuous Usage	7.5 month+ with 1 hour non-stop usage per day

OPTIONAL KEYBOARDS

Optional HP Elite x2 1012 G1 Travel Keyboard*

Kit contents	HP Elite x2 1012 G1 Travel Keyboard and documentation
Weight	.848 lb (385 g)

Optional HP Elite x2 1012 Advanced Keyboard *

Kit contents	HP Elite x2 1012 Advanced Keyboard and documentation
Key Features	Smart card reader Security - Near Field Communications (NFC) Module
Weight	.992 lb (450 g)

*Sold only as an optional feature

Keyboard Features (common to both Travel and Advanced Keyboards)

- Backlit
- HP Dura Keys
- ClickPad™ (91 x 51 mm) with image sensor, multi-touch gestures enabled, on/off function and LED indicator
- 150° viewing angle
- Docking connector to tablet
- Full size 81/82-key island-style backlit keyboard with full row of function keys and LED indicators

Function Keys	F1 - Blank F2 - Blank F3 - Sleep F4 - Display Switching F5 - Mute F6 - Volume Down F7 - Volume Up F8 - Mic Mute F9 - Brightness Down F10 - Brightness Up F11 - Backlight Toggle F12 - Wireless On/Off
ClickPad	Glass with chemical etched surface Supports 2-way scroll Taps enabled as default Gestures enabled by default - 2 Finger Scrolling, 2 Finger Zoom (Pinch)

SOFTWARE AND SECURITY

Preinstalled Software with Windows Operating System

HP BIOS
HP BIOSphere[1]
HP Sure Start with Dynamic Protection
HP DriveLock | HP Automatic DriveLock
HP BIOS Protection[2]
HP SpareKey[3]
BIOS Update via Network
Master Boot Record Security

Technical Specifications

Power On Authentication
Pre-Boot Security
Secure Erase[4]
Hybrid Boot (Windows 8.1 only)
Measured Boot (Windows 8.1 only)
Secure Boot (Windows 8.1 only)
Absolute Persistence Module[5]

MultiMedia
Cyberlink Power2Go
Cyberlink Power DVD

Communication
HP Mobile Connect Pro[6]
Intel WiDi Software[7]

HP Value Add Software
HP ePrint Driver [8]
HP Hotkey Support
HP Support Assistant
HP Recovery Manager (Windows 7 only)
HP Recovery Disc Creator (Windows 7 only)
HP Noise Reduction Software

3rd Party

Foxit PhantomPDF Express for HP

Microsoft Products

Buy Office
Bing Search
Skype[9]

Manageability
HP Driver Packs [10]
HP SoftPaq Download Manager (SDM)
HP System Software Manager (SSM)[10]
HP BIOS Config Utility (BCU)[10]
HP Client Catalog[10]
HP CIK for Microsoft SCCM[10]
LANDESK Management[11]
HP Touchpoint Manager[12]

For more information on HP Client Management Solutions refer to: http://www.hp.com/go/clientmanagement.

Client Security Software
HP Client Security

- HP Security Manager (including Credential Manager and Password Manager)
- HP Drive Lock
- HP Fingerprint Sensor
- HP Password Manager
- Absolute Persistence Module
- Power On Authentication
- Microsoft Security Essentials[13]

- Microsoft Defender[13]

Standard
TPM 2.0 Embedded Security Chip (Common Criteria EAL4+ Certified)
HP Fingerprint Reader (selected models)

For more information on HP Client Security Software Suite, refer to http://www.hp.com/go/clientsecurity.

1. HP BIOSphere features may vary depending on the PC platform & configuration.
2. HP BIOS Protection requires a HPTools partition for automatic recovery.
3. Requires initial user set up.
4. For the methods outlined in the National Institute of Standards and Technology Special Publication 800-88.
5. BIOS Absolute Persistence module is shipped turned off, and will be activated when customers purchase and activate a subscription. Service may be limited. Check with Absolute for availability outside the U.S. The optional subscription service of Absolute Recovery Guarantee is a limited warranty. Certain conditions apply. For full details visit: http://www.absolute.com/company/legal/agreements/computrace-agreement. If Data Delete is utilized, the Recovery Guarantee payment is null and void. In order to use the Data Delete service, customers must first sign a Pre-Authorization Agreement and either create a PIN or purchase one or more RSA SecurID tokens from Absolute Software.
6. HP Mobile Connect Pro is only available on preconfigured devices with WWAN. For geographic availability refer to www.hp.com/go/mobileconnect
7. Integrated Intel Wi-Di feature is available on select configurations only and requires separately purchased projector, TV or computer monitor with an integrated or external Wi-Di receiver. External Wi-Di receivers connect to the projector, TV or computer monitor via a standard HDMI cable, also sold separately.
8. Requires an Internet connection to HP web-enabled printer and HP ePrint account registration (for a list of eligible printers, supported documents and image types and other HP ePrint details, see http://www.hp.com/go/businessmobileprinting).
9. Skype is not offered in China.
10. Not preinstalled, however available for download at http://www.hp.com/go/clientmanagement
11. LANDesk is an optional feature sold separately. Managed devices must be connected to the management server. Location based functionality requires active LANdesk maintenance service. Wipe functionality performs a "Windows 8 Reset" and requires Windows 8. Lock performs a Windows "Lock Computer."
12. HP Touchpoint Manager requires purchase of a subscription and supports Android™, iOS and Windows 7 or higher operating systems and PCs, notebooks, tablets and smartphones from various manufacturers. Not available in all countries see www.hp.com/touchpoint for availability information.
13. Opt in and internet connection required for updates.

POWER

Power Supply

45W USB Type-C™ AC Adapter

- USB Type-C™ DC integrated cord (1.8m)
- AC Power cord (0.45m)

Tablet – Battery

HP 4-cell, Long Life 40 WHr Li-Ion

- Voltage – 7.7 V

Battery Life*

Windows 10 battery time:
TBA *

* Windows 10 battery life will vary depending on various factors including product model, configuration, loaded applications, features, use, wireless functionality, and power management settings. The maximum capacity of the battery will naturally decrease with time and usage. See http://www.bapco.com for additional details.

System Standby Time
TBA days*

* Standby life will vary depending on various factors including battery, Memory, CPU, EC and LAN chip. The maximum capacity of the battery will naturally decrease with time and usage.

WEIGHTS & DIMENSIONS

Weight*

Tablet only
Starting at 1.8 lbs (820 g)

Tablet with Travel Keyboard
2.65 lbs (1205 g)

Tablet with Advanced Keyboard
2.79 lbs (1270 g)

Dimensions - (w x d x h)*

Tablet
11.8 x 8.4 x 0.3 in (300 x 213.5 x 8.05 mm)

Tablet with Travel Keyboard
11.8 x 8.4 x 0.5 in (300 x 213.5 x 13.45 mm)

Tablet with Advanced Keyboard
11.8 x 8.4 x 0.6 in (300 x 213.5 x 16.45 mm)

NOTE: Height varies depending upon where on the notebook the measurement is made.
Weight varies by configuration and components.

*Values are preliminary and may be updated before product launch.

PORTS/SLOTS

Tablet

Ports

1 USB Type-C™, supporting USB 3.1 (supports Thunderbolt™ 3)

1 USB Type-A, supporting USB 3.0

1 Headphone /microphone combo

Slots

1 Micro SIM drawer (optional)

Micro SD Media Reader Drawer -supports microSD, microSDHC, microSDXC

Lock slot

Advanced Keyboard

Ports

Slots

1 Smart Card Reader

SENSORS

Accelerometer

Magnetometer

Gyro

ALS (Ambient Light Sensor)

Proximity (SAR for WWAN)

Hail Sensor

SERVICE AND SUPPORT

HP Services offers 3-year, 1-year and 90 day limited warranty options depending on country. Batteries have a default one year limited warranty except for Long Life batteries which will have same 1-year or 3-year limited warranty as the platform. On-site service and extended coverage is also available. HP Care Pack Services are optional extended service contracts that go beyond the standard limited warranties. To choose the right level of service for your HP product, use the HP Care Pack Services Lookup Tool at: http://www.hp.com/go/cpc.

Service levels and response times for HP Care Packs may vary depending on your geographic location. Service starts on date of hardware purchase. Restrictions and limitations apply. For details, visit www.hp.com/go/cpc.

Technical Specifications

SYSTEM UNIT

Stand-Alone Power Requirements (AC Power)	**Nominal Operating Voltage**	12 V
	Average Operating Power	
	Max Operating Power	< 36 W
Temperature	**Operating**	32° to 95° F (0° to 35° C) (not writing optical) 41° to 95° F (5° to 35° C) (writing optical)
	Non-operating	-4° to 140° F (-20° to 60° C)
Relative Humidity	**Operating**	10% to 90%, non-condensing
	Non-operating	5% to 95%, 101.6° F (38.7° C) maximum wet bulb temperature
Shock	**Operating**	40 G, 2 ms, half-sine
	Non-operating	240 G, 2 ms, half-sine
Random Vibration	**Operating**	1.043 grms
	Non-operating	3.50 grms
Altitude (unpressurized)	**Operating**	-50 to 10,000 ft (-15.24 to 3,048 m)
	Non-operating	-50 to 40,000 ft (-15.24 to 12,192 m)

STORAGE AND DRIVES

128 GB* M.2 Solid State Drive	**Drive Weight**	10 grams	
	Capacity	128 GB	
	Height	0.09 in (2.3mm)	
	Width	0.87 in (22 mm)	
	Interface	SATA 3 (6 Gb/s)	
	Performance	**Maximum Sequential Read**	**Maximum Sequential Write**
		Up to 540 MB/s	Up to 300 MB/s
	Logical Blocks	250,069,680	
	Operating Temperature	32° to 158°F (0° to 70°C) [ambient temp]	
	Features	ATA Security; ATA-8; SATA 3.0; DIPM; TRIM; DVESLP	
180 GB* M.2 Solid State Drive	**Drive Weight**	10 grams	
	Capacity	180 GB	
	Height	0.09 in (2.3mm)	
	Width	0.87 in (22 mm)	
	Interface	SATA Gen 3 (6 Gb/s)	
	Performance	**Maximum Sequential Read**	**Maximum Sequential Write**
		Up to 540 MB/s Compressible performance)	Up to 490 MB/s (Compressible performance)
	Logical Blocks	351,651,888	
	Operating Temperature	32° to 158°F (0° to 70°C) [ambient temp]	
	Features	ATA Security; ATA-8, SATA 3.0; DIPM; TRIM; DEVSLP	

Technical Specifications

180 GB* M.2 Solid State Opal 2 Drive	**Drive Weight**	10 grams	
	Capacity	180 GB	
	Height	0.09 in (2.3 mm)	
	Width	0.87 in (22 mm)	
	Interface	SATA Gen 3 (6 Gb/s)	
	Performance	**Maximum Sequential Read**	**Maximum Sequential Write**
		Up to 540 MB/s (Compressible performance)	Up to 490 MB/s (Compressible performance)
	Logical Blocks	351,651,888	
	Operating Temperature	32° to 158°F (0° to 70°C) [ambient temp]	
	Features	ATA Security; TCG OPAL 2.x; ATA-8, SATA 3.0; DIPM; TRIM; DEVSLP	
256 GB* M.2 Solid State Drive	**Drive Weight**	10 grams	
	Capacity	256 GB	
	Height	0.09 (2.3mm)	
	Width	0.87 in (22 mm)	
	Interface	SATA Gen 3 (6 Gb/s)	
	Performance	**Maximum Sequential Read**	**Maximum Sequential Write**
		Up to 540MB/s	Up to 455 MB/s
	Logical Blocks	500,118,192	
	Operating Temperature	32° to 158°F (0° to 70°C) [ambient temp]	
	Features	ATA Security; ATA-8, SATA 3.0; DIPM; TRIM; DEVSLP	
256 GB* M.2 Solid State Opal 2 Drive	**Drive Weight**	10 grams	
	Capacity	256 GB	
	Height	0.09 (2.3 mm)	
	Width	0.87 in (22 mm)	
	Interface	SATA Gen 3 (6 Gb/s)	
	Performance	**Maximum Sequential Read**	**Maximum Sequential Write**
		Up to 540 MB/s	Up to 460 MB/s
	Logical Blocks	500,118,192	
	Operating Temperature	32° to 158°F (0° to 70°C) [ambient temp]	
	Features	ATA Security; TCG OPAL 2.x; ATA-8, SATA 3.0; DIPM; TRIM; DEVSLP	
256 GB* M.2 Solid State PCIe 3X4 NVMe Drive	**Drive Weight**	10 grams	
	Capacity	256 GB	
	Height	0.09 (2.3 mm)	
	Width	0.87 in (22 mm)	
	Interface	SATA Gen 3 (6 Gb/s)	
	Performance	**Maximum Sequential Read**	**Maximum Sequential Write**
		Up to 2260 MB/s	Up to 1260 MB/s
	Logical Blocks	500,118,192	
	Operating Temperature	32° to 158°F (0° to 70°C) [ambient temp]	
	Features	ATA Security; PCIe Gen3x4, TRIM, L1.2	

512 GB* M.2 Solid State Drive	**Drive Weight**	10 grams	
	Capacity	256 GB	
	Height	0.09 in (2.3 mm)	
	Width	0.87 in (22 mm)	
	Interface	SATA Gen 3 (6 Gb/s)	
	Performance	**Maximum Sequential Read**	**Maximum Sequential Write**
		Up to 540 MB/s	Up to 500 MB/s
	Logical Blocks	1,000, 215, 216	
	Operating Temperature	32° to 158°F (0° to 70°C) [ambient temp]	
	Features	ATA Security; ATA-8, SATA 3.0; DIPM; TRIM; DEVSLP	

SECURITY

HP Fingerprint Reader	**Mobile Voltage Operation**	3.0V-3.6V
(Optional – available on the Tablet)	**Operating Temperature**	14° – 167°F (-10° – 75°C)
	Current Consumption Image	36 mA peak
	Low Latency Wait for Finger	950 uA
	Capture Rate	30 cm/sec
	ESD Resistance	IEC 61000-4-2 4B (±15KV)
	Detection Matrix	200*1 (plus another secondary line) 508 dpi 10 mm sensor area

NETWORKING/COMMUNICATIONS

WWAN Modules

HP hs3110 HSPA+ Mobile Broadband Module*

Technology/Operating bands	HSPA+: 2100 (Band1), 1900 (Band 2), 1700 (Band 4), 850 (Band 5), 900 (Band 8) MHz E-GPRS: 1900 (Band 2), 1800 (Band 3), 850 MHz (Band 5), 900 (Band 8) MHz
Wireless protocol standards	E-GPRS: Class B, Multi-slot class 33, coding schemes CS1 - CS4 and MSC1 - MSC9. UMTS/WCDMA: Release 99 and Release 7
GPS	Standalone, A-GPS
GPS bands	1575.42 MHz ± 1.023 MHz, GLONASS 1596-1607MHz
Maximum data rates	HSPA+: 21.6 Mbps (Download), 5.76 Mbps (Upload) HSPA: 7.2 Mbps (Download), 5.76 Mbps (Upload) WCDMA PS: 384 kbps (Download), 384 kbps (Upload) WCDMA CS: 64 kbps (Download), 64 kbps (Upload) E-GPRS: 296 kbps (Download), 236.8 kbps (Upload) GPRS: 107 kbps (Download), 85.6 kbps (Upload)
Maximum output power	HSPA+: 24 dBm E-GPRS 1800/1900: 26 dBm E-GPRS 850/900: 27 dBm GPRS 1800/1900: 30 dBm GPRS 850/900: 33 dBm

Technical Specifications

Maximum power consumption	HSPA+: 1,100 mA (peak); 800 mA (average) E-GPRS: 2,800 mA (peak); 700 mA (average)
Form Factor	M.2, 3042-S3 Key B
Weight	6 g
Dimensions (Length x Width x Thickness)	1.65 x 1.18 x 0.09 in (42 x 30 x 2.3 mm)

* Mobile Broadband is an optional feature. Connection requires wireless data service contract, network support, and is not available in all areas. Contact service provider to determine the coverage area and availability. Connection speeds will vary due to location, environment, network conditions, and other factors. 4G LTE not available on all products or in all countries.

HP lt4120 Qualcomm® Snapdragon™ X5 LTE Mobile Broadband Module*

Technology/Operating bands	LTE: 2100 (Band 1), 1900 (Band 2), 1800 (Band 3), 1700/2100 (Band 4), 850 (Band 5), 2600 (Band 7), 900 (Band 8), 700 (Band 12 lower), 700 (Band 13 upper), 700 (Band 17 lower), 800 (Band 20), 700 (Band 28). HSPA+: 2100 (Band 1), 1900 (Band 2), 1700/2100 (Band 4), 850 (Band 5), 900 (Band 8) MHz EV-DO: 850 (BC0), 1900 (BC1) MHz (Only work with Verizon network) E-GPRS: 1900 (Band 2), 1800 (Band 3), 850 (Band 5), 900 (Band 8) MHz
Wireless protocol standards	3GPP Release 10 LTE Specification CAT.4, 20MHz BW WCDMA R99, 3GPP Release 5, 6, 7 and 8 UMTS Specification 1xEVDO Release 0, A and B. E-GPRS: Class B, Multi-slot class 12, coding schemes CS1 - CS4 and MSC1 - MSC9
GPS	Standalone, A-GPS (MS-A, MS-B and XTRA)
GPS bands	1575.42 MHz ± 1.023 MHz, GLONASS 1596-1607MHz
Maximum data rates	LTE: 150 Mbps (Download), 50 Mbps (Upload) DC-HSPA+: 42 Mbps (Download), 5.76 Mbps (Upload) HSPA+: 21Mbps (Download), 5.76 Mbps (Upload) CDMA 1xRTT: 153.6 kbps (Download), 153.6 kbps (Upload) EVDO Rel.A: 3.1 Mbps (Download), 1.8 Mbps (Upload) EVDO Rel.B: 14.7 Mbps (Download), 5.4Mbps (Upload) EDGE: 236.8 kbps (Download), 236.8 kbps (Upload) GPRS: 85.6 kbps(Download), 85.6 kbps (Upload)
Maximum output power	LTE: 23 dBm HSPA+: 23.5 dBm 1xRTT/EVDO: 24dBm E-GPRS 1900/1800: 26 dBm E-GPRS 900/850: 27 dBm GPRS 1900/1800: 29.5 dBm GPRS 900/850: 32.5 dBm
Maximum power consumption	LTE: 1,200 mA (peak); 900 mA (average) HSPA+: 1,100 mA (peak); 800 mA (average) 1xRTT/EVDO: 1,000 mA (peak); 700 mA (average) E-GPRS: 2,800 mA (peak); 500 mA (average)
Form Factor	M.2, 3042-S3 Key B
Weight	6.2 g
Dimensions (Length x Width x Thickness)	42 x 30 x 2.3 mm

Technical Specifications

* Mobile Broadband is an optional feature. Connection requires wireless data service contract, network support, and is not available in all areas. Contact service provider to determine the coverage area and availability. Connection speeds will vary due to location, environment, network conditions, and other factors. 4G LTE not available on all products or in all countries.

HP lt4225 LTE/EV-DO Gobi™ 4G Mobile Broadband Module*

Technology/Operating bands	LTE: 1400 (Band 11), 800 (Band 18, Japan 800 lower) EV-DO: 800 (BC0), 2100 (BC6) MHz
Wireless protocol standards	3GPP Release 8 LTE Specification EVDO Release 0 and Release A
GPS	Standalone, A-GPS
GPS bands	1575.42 MHz ± 1.023 MHz, GLONASS 1596-1607MHz
Maximum data rates	LTE: 100 Mbps (Download), 50 Mbps (Upload) CDMA 1x: 153.6 kbps (Download), 153.6 kbps (Upload) EVDO Rev.A: 3.1 Mbps (Download), 1.8 Mbps (Upload)
Maximum output power	LTE: 23 dBm CDMA/EVDO: 24dBm
Maximum power consumption	LTE: 1,200 mA (peak); 900 mA (average) EVDO: 900mA (peak); 720mA (average)
Form Factor	M.2, 3042-S3 Key B
Weight	6 g
Dimensions (Length x Width x Thickness)	1.65 x 1.18 x 0.09 in (42 x 30 x 2.3 mm)

* Mobile Broadband is an optional feature. Connection requires wireless data service contract, network support, and is not available in all areas. Contact service provider to determine the coverage area and availability. Connection speeds will vary due to location, environment, network conditions, and other factors. 4G LTE not available on all products or in all countries.

HP lt4226 LTE/HSPA+ Gobi 4G Module*

Technology/Operating bands	LTE: 2100 (Band 1), 800 (Band 19, Japan 800 upper), 1450 (Band 21) HSPA+: 2100 (Band 1), 800 (Band 6), 800 (Band 19) MHz
Wireless protocol standards	3GPP Release 8 LTE Specification WCDMA R99, 3GPP Release 5, 6 and 7 UMTS Specification
GPS	Standalone, A-GPS
GPS bands	1575.42 MHz ± 1.023 MHz, GLONASS 1596-1607MHz
Maximum data rates	LTE: 100 Mbps (Download), 50 Mbps (Upload) DC-HSPA+: 42 Mbps (Download), 5.76 Mbps (Upload) HSPA+: 21.6 Mbps (Download), 5.76 Mbps (Upload)
Maximum output power	LTE: 23 dBm HSPA+: 23.5 dBm
Maximum power consumption	LTE: 1,200 mA (peak); 900 mA (average) HSPA+: 1,100 mA (peak); 800 mA (average)
Form Factor	M.2, 3042-S3 Key B
Weight	6 g
Dimensions (Length x Width x Thickness)	1.65 x 1.18 x 0.09 in (42 x 30 x 2.3 mm)

Technical Specifications

* Mobile Broadband is an optional feature. Connection requires wireless data service contract, network support, and is not available in all areas. Contact service provider to determine the coverage area and availability. Connection speeds will vary due to location, environment, network conditions, and other factors.
4G LTE not available on all products or in all countries.

Technical Specifications

WLAN MODULES

Intel® Tri Band Wireless-AC 18260 802.11a/b/g/n/ac (2x2) and Bluetooth® 4.0 + WiGig Combo*

Form Factor	Combo Module, M.2 3030-S3-A
Dimensions	30.00±0.15mm by 30.00±0.15mm by 2.38mm max.
Weight	4 grams
Operating Voltage	3.3 Volts
Wireless LAN Standards	IEEE 802.11ad
Interoperability	Wi-Fi certified MAC and Physical Layer WiFi Alliance/WiGig Alliance Protocol Adaption Layers (PALs) (Not yet ratified) Wireless Display Extension (WDE) Wireless Serial Extension (WSE) Note: IP protocol is not supported
Frequency Band	802.11ad 57 – 66 GHz Note: There are 4 bands (1, 2, 3, 4) but only 2 (bands 2 and 3) are supported in most of the countries on the planet. HP will support only bands 2 and 3, 59-64 GHz Note: Not all countries allow unlicensed operation at these frequencies
Antenna Structure (Remote Front End Module, R-FEM)	Active, Beam Steering Array of 10 x 2 Elements, 8 x 2 Active Elements Azimuth 8 active elements Elevation 2 active elements Vertical tilt of 20 to 30 degrees off of broadside Horizontal beam steering ±65°, -6dB from peak gain Vertical beam steering +80° -50°, -6dB from peak gain Azimuth beam width ~20°, -6dB from peak gain Elevation beam width ~80°, -6dB from peak gain Omni (no beam forming) beam width ~110°, -6dB from peak gain Vertical Polarization Device side supports one R-FEM Dock side supports one or two R-FEMs
Data Rates (RAW)	MCS Rate, Mbit/s Modulation 0 27.5 π/2-BPSK 1 385.0 π/2-BPSK 2 770.0 π/2-BPSK 3 962.5 π/2-BPSK 4 1155.0 π/2-BPSK 5 1251.25 π/2-BPSK 6 1540.0 π/2-QPSK 7 1925.0 π/2-QPSK 8 2310.0 π/2-QPSK 9 2502.5 π/2-QPSK 10 3080.0 π/-16QAM 11 3850.0 π/-16QAM 12 4620.0 π/-16QAM
Network Architecture Models	Ad-hoc (Peer to Peer)

Technical Specifications

Wireless Display Extension (WDE)	WGA WDE support	AV PAL (WDE) as defined by WiGig alliance
	AVC/MPEG support - encoder	WDE supports generation of MPEG-PS / MPEG-PES packets as described in the WDE standard WDE supports AVC (H264) encoder, intra only, 4:4:4 Chroma subsampling. Different visually lossless and lossy scenarios are supported by configuration
	AVC/MPEG support – decoder	H.264 CAVLC 4:4:4 I-only sub sampling is supported
	Type of Interface	Client device side • DP (Display port) v1.2a – HBR (1, 2, 4 lanes) Dock device side • DP v1.2 – HBR (1, 2, 4 lanes) • HDMI v1.4a (through external Hub or cable adapter) • DP++ compatible **Note**: DP v1.2 is backward compatible with DP v1.1a
	DP Resolution and Frame Rate Support	DP will support the following resolutions 640x480, 1280x720, 1920x1080, 1920x1200, 2560x1440, 2560x1600 and frame rates – 24, 25, 30, 50 and 60 Hz All resolutions are in progressive mode (no interlaced supported) Specifically, the following resolutions and frame rats will be supported • 640x480p60 • 1280x720p60 • 1920x1080p60 • 1920x1200p60 • 2560x1440p60 • 2560x1600p60 **Note:** resolution and refresh rate may change in situations where there is a bad link or strict limits on TDP
	HDMI Resolution and Frame Rate Support	HDMI supports the following resolution and frame rates – • 640x480p60 • 1280x720p60 • 1920x1080p60 • 1920x1200p60 • 2560x1440p60 • 2560x1600p60 **Note:** resolution and refresh rate may change in situations where there is a bad link or strict limits on TDP
	Color space support	YCbCr and RGB

	DP & HDMI Color Depth Support	The following color depths are supported 8 bits per color
	Dual display mode	The Output interface (Display Port Multi-Stream Transport, DP MST) has the ability to support dual display mode – splitting the video stream is based on external HW (with monitors that can support it, a daisy chain approach can be used to support dual display mode)
	Multiple Display Stream Support (MST)	The following dual display mode via MST is supported • 2 x (1280x720) • 2 x (1920x1080) • 2 x (1920x1200) 1920x1080 plus 1920x1200
	Audio Pass-Through Support	Support for all relevant Audio formats in Support for all relevant Audio formats in Pass-Through mode as defined in the WDE specification. LPCM (uncompressed and uncompounded), 2-8 channels, 32KHz – 192KHz, up to 24 bits per sample (dependent on the number of channels)
	Independent Digital Audio Out Interface (Sink)	Support for an independent digital Audio Out sink interface, operational upon insertion of an audio peripheral, and not dependent on monitor state (On/Off/Powered-Off) • 4 x I2S Interfaces • Multiplexed with • S/PDIF Interface
	Selection of Independent Audio Out Interface	Selection of output interface (I^2S or SPDIF) and on-board audio device capabilities is configurable on a system basis through module Flash Configuration.
	AUX/DDC Channel Interface	AUX (DP) / DDC (HDMI) channel is supported. **Note:** FAUX – fast AUX (~7000Mb) is not required.
	Chosen resolution, frame rate, color space, audio capabilities	WDE will inform the host graphics of the best resolution , frame rate, color space and audio capabilities based on • Native/Supported monitor resolutions • Module Core Capabilities • Power consumption considerations • Link status(physical layer rate and other services)
	Hot Plug	Plug and Play through hot plug detection is not supported
Wireless Serial Extension (WSE) for support of USB data flow over wireless link	WGA WSE support	USB PAL (WSE) version 1.2 (June 2013)

WSE Supported USB Ports	Single USB 2.0/3.0 Root Port
USB Hub	Supports direct connection to an external USB Hub device. Any USB devices on the Dock device should be connected to the external USB Hub.
Port Powering	Module does not support USB device powering. Any Dock device must be self-powered or powered from an external USB Hub in the Dock Device. The module is capable of managing the powering requirements of USB devices connected to the Dock USB Hub external to the module.
WSE Supported Devices	USB devices listed in 'Supported USB Peripherals over USB' below are supported, separately and simultaneously. It supports control, interrupt, bulk and isochronous flows based on the supported device capabilities.
Number of USB devices supported on Dock device	At least 12 USB devices
Number of USB Hub Tiers supported	Maximum number of Hub Tiers connected to the external Hub in the Dock device is 3. A 4th Tier will only support non Hub devices.

Supported USB peripherals over WSE

Device Class	Comment
HID	Supported
Printer	Supported
Communication Device Class (CDC)	Supported
Mass Storage Class (MSC)	Supported
Hub	Supported
Audio Class	Supported
USB Video Class (UVC)	Supported

* Wireless access point and Iternet service required. Availability if public wireless access points limited. The specifications for the 802.11ac WLAN are draft specifications and are not final. If the final specifications differ from the draft specifications, it may affect the ability of the notebook to communicate with other 802.11ac WLAN devices.

Intel® Dual Band Wireless-AC 8260 802.11a/b/g/n/ac (2x2) WiFi and Bluetooth® 4.2 Combo*

Wireless LAN Standards	IEEE 802.11a IEEE 802.11b IEEE 802.11g IEEE 802.11n IEEE 802.11ac
Interoperability	Wi-Fi certified
Frequency Band	802.11b/g/n • 2.402 – 2.482 GHz Note:

	The FCC has declared as of January 1, 2015 products that utilize passive scanning on channel 12/13 and are capable of transmitting must fully comply with requirements of 15.247 or otherwise disable those channels. 802.11a/n • 4.9 – 4.95 GHz (Japan) • 5.15 – 5.25 GHz • 5.25 – 5.35 GHz • 5.47 – 5.725 GHz • 5.825 – 5.850 GHz Note: Indonesia no support this band)
Data Rates	• 802.11b: 1, 2, 5.5, 11 Mbps • 802.11g: 6, 9, 12, 18, 24, 36, 48, 54 Mbps • 802.11a: 6, 9, 12, 18, 24, 36, 48, 54 Mbps • 802.11n: MCS 0 ~ MCS 15, (20MHz, and 40MHz) • 802.11ac : MCS0 ~ MCS9, (1SS, and 2SS) (20MHz, 40MHz, and 80MHz)
Modulation	Direct Sequence Spread Spectrum BPSK, QPSK, CCK, 16-QAM, 64-QAM, 256-QAM
Security[1]	• IEEE and WiFi compliant 64 / 128 bit WEP encryption for a/b/g mode only • AES-CCMP: 128 bit in hardware • 802.1x authentication • WPA, WPA2: 802.1x. WPA-PSK, WPA2-PSK, TKIP, and AES. • WPA2 certification • IEEE 802.11i • Cisco Certified Extensions, all versions through CCX4 and CCX Lite • WAPI
Network Architecture	Ad-hoc (Peer to Peer)
Models	Infrastructure (Access Point Required)
Roaming	IEEE 802.11 compliant roaming between access points
Output Power[2]	• 802.11b : +16dBm minimum • 802.11g : +14dBm minimum • 802.11a : +14dBm minimum • 802.11n HT20(2.4GHz) : +14dBm minimum • 802.11n HT40(2.4GHz) : +12dBm minimum • 802.11n HT20(5GHz) : +14dBm minimum • 802.11n HT40(5GHz) : +12dBm minimum

Technical Specifications

Power Consumption	Transmit: 2.0 W (max) Receive: 1.6 W (max) Idle mode (PSP): 180 mW (WLAN Associated) Idle mode: 50 mW (WLAN unassociated) Connect Standby: 10 mW (WLAN+BT) Radio disabled: 5 mW
Power Management	ACPI and PCI Express compliant power management 802.11 compliant power saving mode
Receiver Sensitivity[3]	802.11b, 1Mbps : -94dBm maximum 802.11b, 11Mbps : -86dBm maximum 802.11g, 6Mbps : -88dBm maximum 802.11g, 54Mbps : -74dBm maximum 802.11a, 6Mbps : -88dBm maximum 802.11a, 54Mbps : -74dBm maximum 802.11n, MCS07 : -69dBm maximum 802.11n, MCS15 : -66dBm maximum 802.11ac, 1SS, MCS-0 : -86dBm maximum 802.11ac, 1SS, MCS-9 : -61dBm maximum 802.11ac, 2SS, MCS-0 : -83dBm maximum 802.11ac, 2SS, MCS-9 : -58dBm maximum
Antenna type	High efficiency antenna with spatial diversity, mounted in the display enclosure Two embedded dual band 2.4/5 GHz antennas are provided to the card to support WLAN MIMO communications and Bluetooth communications
Form Factor	PCI-Express M.2 MiniCard
Dimensions	Type 2230 : 2.3 x 22.0 x 30.0 mm Or Type 1630 : 2.3 x 16.0 x 30.0 mm
Weight	Type 2230 : 2.8g Or Type 1630 : 2g
Operating Voltage	3.3v +/- 9%
Temperature	Operating 14° to 158° F (–10° to 70° C) Non-operating –40° to 176° F (–40° to 80° C)
Humidity	Operating 10% to 90% (non-condensing) Non-operating 5% to 95% (non-condensing)
Altitude	Operating 0 to 10,000 ft (3,048 m) Non-operating 0 to 50,000 ft (15,240 m)
LED Activity	LED Amber – Radio OFF; LED White – Radio ON

1. Check latest software/driver release for updates on supported security features.
2. Maximum output power may vary by country according to local regulations.
3. Receiver sensitivity is measured at a packet error rate of 8% for 802.11b (CKK modulation) and a packet error rate of 10% for 802.11a/g (OFDM modulation).
4.

HP Integrated Module with Bluetooth 4.0/4.1/4.2 Wireless Technology

Bluetooth Specification	4.0/4.1/4.2 Compliant
Frequency Band	2402 to 2480 MHz
Number of Available Channels	Legacy : 0~79 (1 MHz/CH) BLE : 0~39 (2 MHz/CH)
Data Rates and Throughput	Legacy : 3 Mbps data rate; throughput up to 2.17 Mbps

Technical Specifications

	BLE : 1 Mbps data rate; throughput up to 0.2 Mbps Legacy : Synchronous Connection Oriented links up to 3, 64 kbps, voice channels Legacy : Asynchronous Connection Less links 2178.1 kbps/177.1 kbps asymmetric (3-DH5) or 864 kbps symmetric (3-EV5)
Transmit Power	The Bluetooth component shall operate as a Class II Bluetooth device with a maximum transmit power of + 4 dBm for BR and EDR.

Receiver Sensitivity Legacy

Modulation	0.01% BER	0.001% BER
GFSK	-80 dBm	-70 dBm
π/4-DQPSK	-80 dBm	-70 dBm
8DPSK	-80 dBm	-70 dBm

Power Consumption	Peak (Tx) 330 mW Peak (Rx) 230 mW Selective Suspend 17 mW
Range	Legacy Up to 33 ft (10 m) BLE Up to 99 ft (30 m)
Electrical Interface	USB 2.0 compliant
Bluetooth Software Supported	Microsoft Windows Bluetooth Software
Link Topology	Point to Point, Multipoint Pico Nets up to 7 slaves
Electrical Interface	
Bluetooth Software Supported	
Security	Full support of Bluetooth Security Provisions
Power Management	Microsoft Windows ACPI, and USB Bus Support
Certifications	Self-configurable to optimize power conservation in all operating modes, including Standby, Hold, Park, and Sniff
Security	All necessary regulatory approvals for supported countries, including:
Certifications	FCC (47 CFR) Part 15C, Section 15.247 & 15.249
Bluetooth Profiles Supported	
Power Management	ETS 300 328, ETS 300 826
Certifications	Low Voltage Directive IEC950
	UL, CSA, and CE Mark
	Serial Port Profile (SPP)[1]
	Service Discovery Application Profile (SDAP)
	Dial-Up Networking (DUN)[1,2]
	Generic Object Exchange Profile (GOEP)[1,2]
Certifications	Object Push Profile (OPP)[1,2]
Bluetooth Profiles Supported	Hard Copy Cable Replacement (HCRP)[1,2]
	Personal Area Networking Profile (PAN)[1,2]
	Human Interface Device Profile (HID)[1,2]
	Hands Free Profile (HFP)
	Advanced Audio Distribution Profile (A2DP)
	Audio Video Remote Control Profile (AVRCP)
Bluetooth V4.1/V4.2 support feature	V4.1: ESR5/6/7 compliant
	V4.2: ESR8 compliant, LE Secure Connection – Basic.

* Wireless access point and Iternet service required. Availability if public wireless access points limited. The specifications for the 802.11ac WLAN are draft specifications and are not final. If the final specifications differ from the draft specifications, it may affect the ability of the notebook to communicate with other 802.11ac WLAN devices.

Technical Specifications

POWER

HP AC Adapter 45W USB Type-C™	**Dimensions** (H x W x D)	66mm x 66mm x 28.5mm	
	Input	90 to 265 VAC	
		Input Efficiency	
			+5V out --78.7% min at 115 VAC/230VAC +12V out—87.4% min at 115 VAC/230VAC +15V out –87.73% min at 115 VAC/230VAC
		Input frequency range	47 to 63 Hz
		Input AC current	1.4 A at 90 VAC and maximum load
	Output	Output power	45W
		DC output	5V/12V/15V
		Hold-up time	5 msec at 115 VAC input
		Output current limit	<5A, Over voltage protection 7.85V@5Vout 18V@12Vout 20.5V@15Vout max automatic shutdown
	Connector	**USB TYPE C connector**	
	Environmental Design	**Operating temperature**	32° to 95° F (0° to 35° C)
		Non-operating (storage) temperature	-4° to 121° F (-20° to 85° C)
		Altitude	0 to 16,405 ft (0 to 5,000 m)
		Humidity	0% to 95%
		Storage Humidity	0% to 95%
	EMI and Safety Certifications	CE Mark - full compliance with LVD and EMC directives; Worldwide safety standards - IEC60950, EN60950, UL60950, Class1, SELV; Agency approvals - C-UL-US, NORDICS, DENAN, EN55022 Class B, FCC Class B, CISPR22 Class B, CCC, NOM-1 NYCE; Reliability - failure rate of less than 0.1% annually within the first three years of operation.	

HP 4-cell Polymer Battery (40 WHr)	**Dimensions (H x W x L)**	138.15 x 58.90 x 3.81 mm 5.44 x 2.32 x 0.15 inch	
	Weight	0.166 kg/0.37 lb	
	Cells/Type	4-cell Lithium-Ion	
	Energy	Voltage : 7.7V Amp-hour capactity Ah Watt-hour capacity : 40 WHr	
	Watt-hour capacity	40 WHr	
	Temperature	**Operating (Charging)**	32° to 113° F (0° to 45° C)
		Operating (Discharging)	14° to 140° F (-10° to 60° C
		Non-operating	-4° to 140° F (-20° to 60° C)
	Battery recharge time	System in OFF or Standby Mode <3 hours	
	Fuel Gauge LED	No	
	Optional travel battery available	No	

Technical Specifications

COUNTRY OF ORIGIN

China

Options and Accessories (sold separately and availability may vary by country)

Type	Description	Part number
Carrying Cases	HP Elite Top Load Colombian Leather Case	T9H72AA
	HP Elite Top Load Herringbone Nylon Case	T9H73AA
	HP Business Slim Top Load (up to 14.1" x .75" thick)	H5M90AA
	HP Slim Ultrabook Messenger (up to 15.6" x .88"/22/5mm)	F3W14AA
	HP Slim Ultrabook Top Load (up to 15.6" x .88"/22/5mm)	F3W15AA
	HP Slim Ultrabook Backpack (up to 15.6" x .88"/22/5mm)	F3W16AA
	HP UltraSlim Tablet Sling	F7Z97AA
	HP Essential Top Load Case (up to 15.6")	H2W17AA
	HP Essential Backpack (up to 15.6")	H1D24AA
	HP x2 1012 Protective Case	T3P15AA
Input/Output Devices	HP Active Pen with Bluetooth App Launch Button	T4Z24AA
	HP Ultra Mobile Wireless Mouse	H6F25AA
	HP 3-Button Laser Mouse	H4B81AA
	HP Ultrathin Wireless Mouse	L9V78AA
	HP 2.4 GHz Wireless Mouse	L0Z84AA
	HP Conferencing Keyboard	K8P74AA
	HP Stereo 3.5mm Headset	T1A66AA
	HP Stereo USB 3.5mm Headset	T1A67AA
	HP Speaker Phone	K7V16AA
	HP Wired Headset	K7V17AA
	HP H2310 Black In-ear headset	J8H42AA
Adapters	HP USB Graphics Adapter	NL571AA
	HP USB Type-C™ to VGA Adapter	N9K76AA
	HP USB Type-C™ to HDMI Adapter	N9K77AA
	HP USB Type-C™ to DisplayPort Adapter	N9K78AA
	HP USB 3.0 to Gigabit LAN adapter	N7P47AA
	HP USB-C™ to Ethernet/USB 3.0/USB-C power in/data	N2Z64AA
	HP USB-C™ to USB 3.0 adapter	N2Z63AA
	HP USB-C™ to HP USB-C to 4.5mm + 3.0mm Combo DC Jack adapter	N2Z65AA
	HP Wireless display Adapter	J1V25AA
Keyboards	HP Elite x21011 G1 Travel Keyboard	T4Z25AA
	HP Elite x2 1012 Advanced Keyboard	P5Q65AA
	USB Stylish Keyboard & Mouse Bundle	H4B80AA
	HP Conferencing Keyboard	K8P74AA
	HP Wireless keyboard and mouse	G1K29AA
Docking Stations/Replicators	HP Advanced Wireless Docking Station	F7M97AA

Options and Accessories (sold separately and availability may vary by country)

	HP Elite USB-C Docking Station	T3V74AA
	HP Elite 45W Thunderbolt 3 Dock	P5Q54AA
	HP USB-A 3.1 Port Replicator	H1L08AA
	HP 3005pr USB 3 Port Replicator	H1L08AA
Power Adapters	HP 45W USB Type-C™ AC Adapter	TBD
Storage	HP External USB Optical Drive	F2B56AA
Security	HP Tablet Master Cable Lock	T8X45AA
Others	HP Tablet Cleaning Kit	K6F99AA

© Copyright 2015 HP Development Company, L.P. The information contained herein is subject to change without notice. The only warranties for HP products are set forth in the express limited warranty statements accompanying such products. Nothing herein should be construed as constituting an additional warranty. HP shall not be liable for technical or editorial errors or omissions contained herein. Microsoft and Windows are registered trademarks or trademarks of Microsoft Corporation in the U.S. and/or other countries. Intel, Core and vPro are trademarks of Intel Corporation in the U.S. and/or other countries. Bluetooth is a trademark ofits proprietor, used by Hewlett-Packard Company under license. USB Type-C™ and USB-C™ are trademarks of USB Implementers Forum.

Summary of Changes

Date of change:	Version History:	Description of change:
	From v1 to v2	