Tuf-Tuf Tusks™

SKU: 644801

Ages 3+
ADULT BATTERY INSTALLATION REQUIRED

CONTENTS

A. 1 Tuf-Tuf Tusks™ Elephant

A.

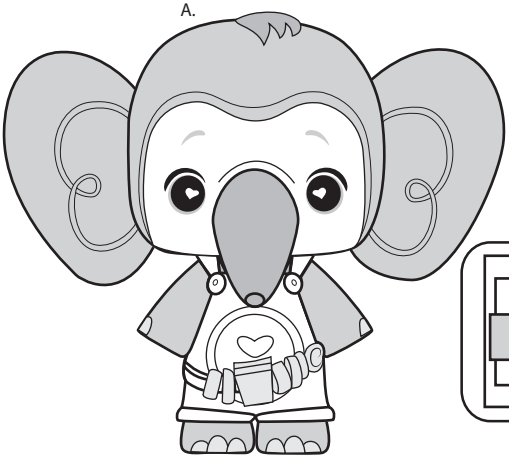

BEFORE YOU BEGIN

The batteries included in the elephant are for in-store demonstration. Before playing, an adult must install fresh alkaline batteries in the unit. Here's how:

1. Turn the elephant OFF.
2. Using a Phillips screwdriver (not included) remove the screw and battery compartment cover from under the elephant's foot.
3. Install two (2)1.5V AA (LR6) alkaline batteries (not included). Make sure the (+)and (-) ends face the proper direction as indicated inside the battery compartment.
4. Replace the compartment cover and tighten the screw.

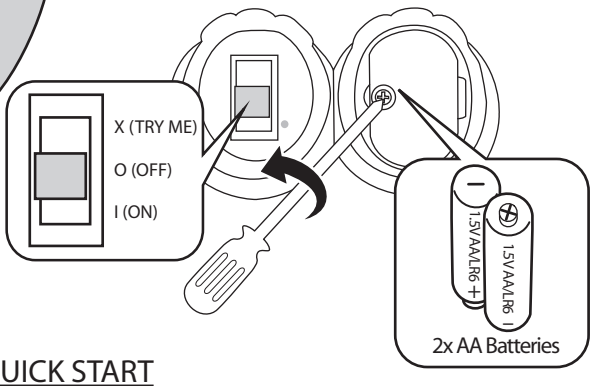

QUICK START

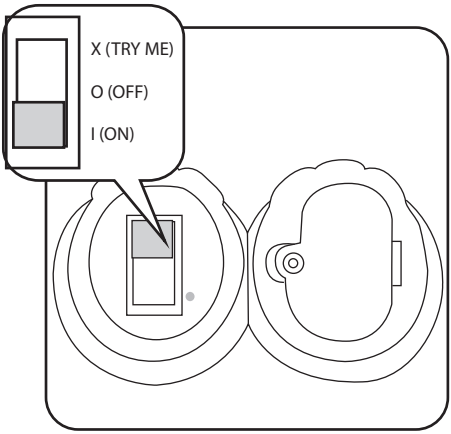

Move the switch under the elephant's foot to the "ON" (I) position.

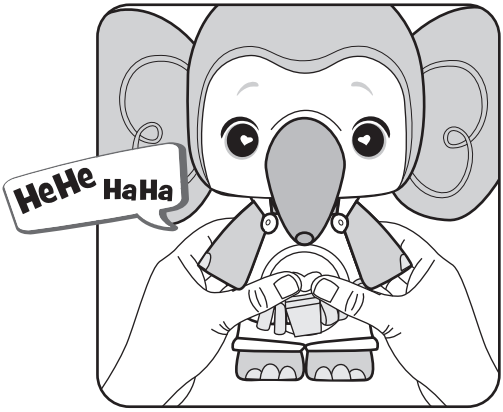

Squeeze the elephant's belly repeatedly to make it giggle!

IMPORTANT INFORMATION

- Always turn the unit "OFF" after playing to conserve battery power.
- Wipe clean with a damp cloth, but keep moisture away from the battery compartment. Air dry thoroughly before storing.
- Keep sharp objects and pets away from the elephant to prevent puncturing or tearing.
- Illustrations are for reference only. Styles may vary from actual contents.

LIMITED WARRANTY

The Little Tikes Company makes fun, high quality toys. We warrant to the original purchaser that this product is free of defects in materials or workmanship for one year * from the date of purchase (dated sales receipt is required for proof of purchase). At the sole election of The Little Tikes Company, the only remedies available under this warranty will be the replacement of the defective part or replacement of the product. This warranty is valid only if the product has been assembled and maintained per the instructions. This warranty does not cover abuse, accident, cosmetic issues such as fading or scratches from normal wear, or any other cause not arising from defects in material and workmanship. *The warranty period is three (3) months for daycare or commercial purchasers. U.S.A and Canada: For warranty service or replacement part information, please visit our website at www.littletikes.com, call 1-800-321-0183 or write to: Consumer Service, The Little Tikes Company, 2180 Barlow Road, Hudson OH 44236, U.S.A. Some replacement parts may be available for purchase after warranty expires—contact us for details. Outside U.S.A and Canada: Contact place of purchase for warranty service. This warranty gives you specific legal rights, and you may also have other rights, which vary from country/state to country/state. Some countries/states do not allow the exclusion or limitation of incidental or consequential damages, so the above limitation or exclusion may not apply to you.

BATTERY SAFETY INFORMATION

- Use only size "AA" (LR6) alkaline batteries (2 required).
- Charging of rechargeable batteries should only be done under adult supervision with batteries removed from product.
- Do not mix old and new batteries.
- Do not mix alkaline, standard (carbon-zinc), or rechargeable batteries.
- Be sure to insert the batteries correctly and follow the toy and battery manufacturer's instruction.
- Always remove exhausted or dead batteries from the product.
- Dispose of dead batteries properly: do not burn or bury them.
- Do not attempt to recharge non-rechargeable batteries.
- Avoid short-circuiting battery terminals.
- Remove batteries before placing the unit into storage for a prolonged period of time.

FCC COMPLIANCE

NOTE: This equipment has been tested and found to comply with the limits for a Class B digital device, pursuant to Part 15 of the FCC Rules. These limits are designed to provide reasonable protection against harmful interference in a residential installation. This equipment generates, uses and can radiate radio frequency energy and, if not installed and used in accordance with the instructions, may cause harmful interference to radio communications. However, there is no guarantee that interference will not occur in a particular installation. If this equipment does cause harmful interference to radio or television reception, which can be determined by turning the equipment off and on, the user is encouraged to try to correct the interference by one or more of the following measures:

- Reorient or relocate the receiving antenna.
- Increase the separation between the equipment and receiver.
- Connect the equipment into an outlet on a circuit different from that to which the receiver is connected.
- Consult the dealer or an experienced radio/TV technician for help.

This device complies with Part 15 of the FCC Rules. Operation is subject to the following two conditions: (1) This device may not cause harmful interference, and (2) this device must accept any interference received, including interference that may cause undesired operation.
Caution: Modifications not authorized by the manufacturer may void users authority to operate this device.
CAN ICES-3 (B)/NMB-3(B).

'Let's care for the environment!'
The wheelie bin symbol indicates that the product must not be disposed of with other household waste. Please use designated collection points or recycling facilities when disposing of the item. Do not treat old batteries as household waste. Take them to a designated recycling facility.

Please keep this manual as it contains important information.

© The Little Tikes Company,
an MGA Entertainment company.
LITTLE TIKES® is a trademark of Little Tikes in the U.S. and other countries. All logos, names, characters, likenesses, images, slogans, and packaging appearance are the property of Little Tikes.

0417-0-E/INT

Little Tikes Consumer Service
2180 Barlow Road Hudson, Ohio 44236 U.S.A.
1-800-321-0183

Printed in China

MGA Entertainment UK Ltd
50 Presley Way
Crownhill
Milton Keynes
MK8 0ES
Bucks, UK
0800 521 558

www.littletikes.com
www.littletikes.co.uk

Visit our website at
www.littletikes.com
to register your product and
to enter our sweepstakes.
(No purchase necessary)