Register your product and get support at
www.philips.com/welcome

BHC111



EN User manual

ZH-TW 使用手冊

PHILIPS

Specifications are subject to change without notice
© 2015 Koninklijke Philips N.V.
All rights reserved.

3140 035 41561

1

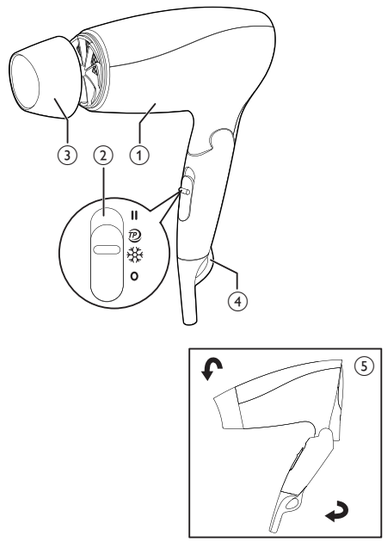

2

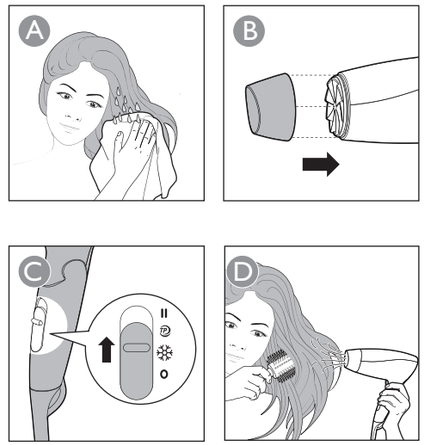

English

Congratulations on your purchase, and welcome to Philips! To fully benefit from the support that Philips offers, register your product at www.philips.com/welcome.

1 Important

Read this user manual carefully before you use the appliance and keep it for future reference.

- WARNING: Do not use this appliance near water.
- When the appliance is used in a bathroom, unplug it after use since the proximity of water presents a risk, even when the appliance is switched off.
- WARNING: Do not use this appliance near bathtubs, showers, basins or other vessels containing water.
- Always unplug the appliance after use.
- If the appliance overheats, it switches off automatically. Unplug the appliance and let it cool down for a few minutes. Before you switch the appliance on again, check the grilles to make sure they are not blocked by fluff, hair, etc.
- If the mains cord is damaged, you must have it replaced by Philips, a service centre authorised by Philips or similarly qualified persons in order to avoid a hazard.
- This appliance can be used by children aged from 8 years and above and persons with reduced physical, sensory or mental capabilities or lack of experience and knowledge if they have been given supervision or instruction concerning use of the appliance in a safe way and understand the hazards involved. Children shall not play with the appliance. Cleaning and user maintenance shall not be made by children without supervision.
- For additional protection, we advise you to install a residual current device (RCD) in the electrical circuit that supplies the bathroom. This RCD must have a rated residual operating current not higher than 30mA. Ask your installer for advice.
- Do not insert metal objects into the air grilles to avoid electric shock.
- Never block the air grilles.
- Before you connect the appliance, ensure that the voltage indicated on the appliance corresponds to the local power voltage.
- Do not use the appliance for any other purpose than described in this manual.
- Do not use the appliance on artificial hair.
- When the appliance is connected to the power, never leave it unattended.
- Never use any accessories or parts from other manufacturers or that Philips does not specifically recommend. If you use such accessories or parts, your guarantee becomes invalid.
- Do not wind the mains cord round the appliance.
- Wait until the appliance has cooled down before you store it.
- Do not pull on the power cord after using. Always unplug the appliance by holding the plug.

Electromagnetic fields (EMF)

This Philips appliance complies with all applicable standards and regulations regarding exposure to electromagnetic fields.

Environment

Do not throw away the appliance with the normal household waste at the end of its life, but hand it in at an official collection point for recycling. By doing this, you help to preserve the environment.

2 Introduction

KeraShine range hair dryer, specially designed air outlet with kerartin coating and millions of ion for a comprehensive and deep nourishment.

SPA technology, Soft Protective Airflow, is designed to provide efficient and comfortable scalp and hair drying. Thanks to its innovative **EHD** (Even Heat Distribution) air outlet design, SPA technology helps to create an optimal balance between evenly distributed heat and softened airflow, which enables you to easily upgrade your drying process to a soothing SPA experience. SPA technology with 1500W power, dries fast and wide in a gentle way which ensures thorough drying result with less discomfort and hot spot on scalp or hair.

3 Dry your hair

1 Select the nozzle (③) and attach it onto the hairdryer properly before using.
2 Connect the plug to a power supply socket.
3 Adjust the airflow switch (②) according to your preference.

Switch	Settings	Function
II	Hot and strong airflow	Dry shower-wet hair quickly
	Constant caring airflow	Dry your hair at a constant caring temperature
	Cool airflow	Fix your style

1

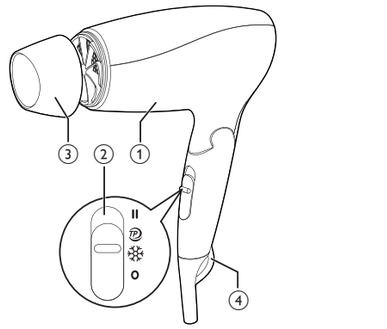

↳ When the appliance is powered on, ions are automatically and continuously dispensed, reducing frizz and providing additional shine. A special odor may be smelt. It is normal and caused by the ions which are generated.

4 The nozzle enables you to direct the airflow straight at the brush or comb with which you are styling your hair.

After use:

1 Switch off the appliance and unplug it.
2 Place it on a heat-resistant surface until it cools down.
3 To disconnect the attachment, pull it off the hairdryer.
4 Clean the appliance by damp cloth.
5 Keep it in a safe and dry place, free of dust. You can also fold the appliance (⑤) or hang it with the hanging loop (④).

4 Guarantee and service

If you need information e.g. about replacement of an attachment or if you have a problem, please visit the Philips website at www.philips.com/support or contact the Philips Consumer Care Center in your country.The phone number is in the worldwide guarantee leaflet. If there is no Consumer Care Centre in your country, go to your local Philips dealer.

2

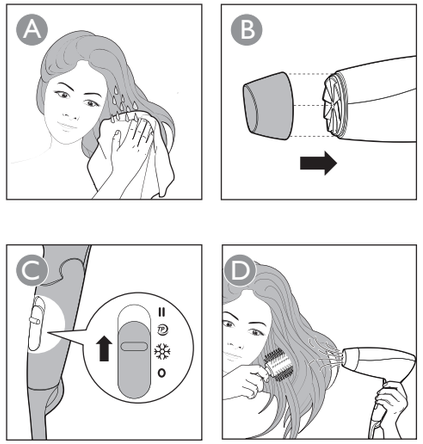

5 Troubleshooting

Problem	Cause	Solution
The appliance does not work at all.	The power socket to which the appliance has been connected may be broken.	Check the appliance is plugged in correctly. Check the fuse for this power socket in your home.
	The appliance may have overheated and switched itself off.	Unplug the appliance and let it cool down for a few minutes. Before you switch on the appliance again, check the grilles to make sure they are not blocked by fluff, hair, etc.
	The appliance may not be suitable for the voltage to which it has been connected.	Ensure that the voltage indicated on the type plate of the appliance corresponds to the local power voltage.

繁體中文

感謝您購買本產品。歡迎來到飛利浦的世界!
請至 www.philips.com/welcome 註冊您的產品，以獲得飛利浦提供的完整支援。

1 重要事項

使用本產品前，請先仔細閱讀本使用手冊，並保留說明以供日後參考。

- 警告：請勿在靠近水的地方使用本產品。
- 在浴室使用完本產品，請將插頭拔除，因為即使產品電源關閉，與水接觸還是可能發生危險。
- 警告：使用本產品時，切勿靠近浴缸、淋浴間、臉盆或其他盛水的容器。
- 用完本產品後，請務必將插頭拔掉。
- 本產品過熱時，會自動斷電。拔出產品插頭，待產品冷卻幾分鐘。在您重新開啟本產品前，請檢查進風柵口，確定沒有被毛絮或毛髮等阻塞。
- 如果電線損壞，則必須交由飛利浦、飛利浦授權之服務中心，或是具備相同資格的技師更換，以免發生危險。
- 本產品可供 8 歲以上孩童、身體官能或心智能力退化者，或是經驗與使用知識缺乏者使用，但需要有人在旁監督或適當指示如何安全使用本產品，以及可能遭受的危險。請勿讓孩童把玩本產品。 若無人在旁監督，不得讓孩童清潔與維護產品。
- 為了加強安全，建議在通向浴室的電流迴路上 安裝 30 毫安培以下的漏電斷路器 (RCD)。請洽詢合格的水電技術人員。
- 請勿將金屬物品插入風口，以避免觸電。
- 不可阻塞進風柵口。
- 在您連接電源之前，請確認本地的電壓與產品所標示的電源電壓相符。
- 請勿將本產品用於本手冊所述之外的任何其他用途。
- 請勿在假髮上使用本產品。
- 在無人看管的情況下，請將本產品的插頭拔除。
- 請勿使用其他製造商的任何配件或零件，或非由飛利浦建議之配件或零件。如果您使用此類配件或零件，保固即會失效。
- 請勿將電線纏繞在本產品上。
- 在進行收納之前，請先等候本產品完全冷卻。
- 使用後切勿拉扯電源線。拔除產品插頭時請務必抓住插頭。

電磁波 (EMF)

本飛利浦產品符合所有電磁場暴露的相關適用標準和法規。

環境保護

本產品使用壽命結束時，請勿與一般家庭廢棄物一併丟棄。請將該產品送至政府指定的回收點進行回收。此舉能為環保盡一份心力。

2 簡介

含有角蛋白塗層的特別出風口設計，結合百萬負離子給秀髮全面的深度養護。

得益于均匀熱力分佈技術，柔護風力設計可提供高效舒適的頭皮與髮絲吹乾效果。 柔護風力設計也有助在均匀佈熱和柔化風力之間建立最佳平衡，使得在干髮過程中有更舒適的體驗。SPA 技術搭配 1500 瓦風力，以溫和方式確保實現速度快、範圍廣的徹底風乾效果，並可降低頭皮或髮絲不適，減少過燙熱點。

3 吹乾頭髮

1 選擇吹嘴配件 (③)，將其正確穩妥地安裝上吹風機。
2 將插頭接上電源插座。
3 根據您的喜好調整風量開關 (②)。

開關	設定	功能
II	熱強風	迅速吹乾淋浴後的秀髮
℗	穩定的護髮風量	以恆定的護髮溫度吹乾頭髮
❄	冷風	造型固定

↳ 當產品電源開啟時，負離子會持續自動釋放，減少毛躁並為秀髮增添更多光澤。 可能會產生特殊氣味，這是正常現象，該氣味是由負離子所造成。

4 在整髮時，吹嘴配件可將風力集中于髮梳上。

使用後：

1 關閉產品電源，並拔除插頭。
2 將本產品放在耐熱的平面上，直到冷卻為止。
3 若要取下配件，請直接從吹風機拔下。
4 以濕布清潔本產品。
5 將產品置於安全乾燥處，避免沾染灰塵。您也可折疊本產品 (⑤) 或使用吊環掛置 (④)。

4 保固與服務

若您需要相關資訊 (如配件更換) 或有任何問題，請瀏覽飛利浦網站 www.philips.com/support，或聯絡您當地的飛利浦客戶服務中心。電話號碼可參閱全球保證書。若當地沒有客戶服務中心，請洽詢當地的飛利浦經銷商。

5 疑難排解

問題	原因	解決方法
無法啟動本產品。	本產品所連接的插座可能損壞。	請檢查產品插頭妥善插好。 檢查您家中此插座所用的保險絲。
	本產品可能過熱導致開關自行關閉。	拔出產品插頭，待產品冷卻幾分鐘。在您重新開啟本產品之前，請檢查進風柵口，確定沒有被毛絮或毛髮等堵住。
	本產品的電壓可能與連接的插座電壓不符。	請確認產品機型牌上指示的電壓與所在地的電壓相符。