Always there to help you

Register your product and get support at
www.philips.com/support

Question? Contact Philips

AZ329



User manual

PHILIPS

Contents

1 Important 2
Safety 2
Notice 2

2 Your CD Soundmachine 4
Introduction 4
What's in the box 4
Overview of the main unit 4

3 Get started 6
Connect power 6
Turn on 7
Turn off 7

4 Play 7
Play a CD 7
Play from an external device 8
Play from USB devices 8
Play from SD card 8
Play tape 9
Tune to FM radio stations 9

5 Play options 10
Control play 10
Program tracks 10
Adjust sound 10

6 Product information 11
Specifications 11
Maintenance 11

7 Troubleshooting 13

1 Important

Safety

- Read these instructions.
- Follow all instructions.
- Do not block any ventilation openings. Install in accordance with the manufacturer's instructions.
- Do not install near any heat sources such as radiators, heat registers, stoves, or other apparatus (including amplifiers) that produce heat.
- Protect the power cord from being walked on or pinched, particularly at plugs, convenience receptacles, and the point where they exit from the unit.
- Only use attachments/accessories specified by the manufacturer.
- Unplug this unit during lightning storms or when unused for long periods of time.
- Recording is permissible insofar as copyright or other rights of third parties are not infringed upon.
- Refer all servicing to qualified service personnel. Servicing is required when the unit has been damaged in any way, such as power-supply cord or plug is damaged, liquid has been spilled or objects have fallen into the apparatus, the unit has been exposed to rain or moisture, does not operate normally, or has been dropped.
- Battery usage CAUTION – To prevent battery leakage which may result in bodily injury, property damage, or damage to the unit:
  - Install all batteries correctly, + and - as marked on the unit.
  - Do not mix batteries (old and new or carbon and alkaline, etc.).
  - Remove batteries when the unit is not used for a long time.
- Batteries (battery pack or batteries installed) shall not be exposed to excessive heat such as sunshine, fire or the like.
- CAUTION: Danger of explosion if battery is incorrectly replaced. Replace only with the same or equivalent type.
- The unit shall not be exposed to dripping or splashing.
- Do not place any sources of danger on the unit (e.g. liquid filled objects, lighted candles).
- Where the MAINS plug or an appliance coupler is used as the disconnect device, the disconnect device shall remain readily operable.

Warning

- Never remove the casing of this apparatus.
- Never place this apparatus on other electrical equipment.
- Never look into the laser beam inside this apparatus.

Caution

- Use of controls or adjustments or performance of procedures other than herein may result in hazardous radiation exposure or other unsafe operation.

Notice

Any changes or modifications made to this device that are not expressly approved by WOOX Innovations may void the user's authority to operate the equipment.

Disposal of your old product and batteries

Your product is designed and manufactured with high quality materials and components, which can be recycled and reused.

Never dispose of your product with other household waste. Please inform yourself about the local rules on the separate collection of electrical and electronic products and batteries. The correct disposal of these products helps prevent potentially negative consequences on the environment and human health.

Your product contains batteries, which cannot be disposed of with normal household waste.

Please inform yourself about the local rules on separate collection of batteries. The correct disposal of batteries helps prevent potentially negative consequences on the environment and human health.

Please visit www.recycle.philips.com for additional information on a recycling center in your area.

Environmental information

All unnecessary packaging has been omitted. We have tried to make the packaging easy to separate into three materials: cardboard (box), paper pulp (buffer) and polyethylene (bags, protective foam sheet.)

Your system consists of materials which can be recycled and reused if disassembled by a specialized company. Please observe the local regulations regarding the disposal of packaging materials, exhausted batteries and old equipment.

This apparatus includes these labels:



Class II equipment symbol



This symbol indicates that the apparatus has a double insulation system.

Be responsible
Respect copyrights

The making of unauthorized copies of copy-protected material, including computer programs, files, broadcasts and sound recordings, may be an infringement of copyrights and constitute a criminal offence. This equipment should not be used for such purposes.

The USB-IF Logos are trademarks of Universal Serial Bus Implementers Forum, Inc.

Note

- The type plate is located on the bottom of the apparatus.

2 Your CD Soundmachine

Introduction

With this CD Soundmachine, you can:

- listen to FM radio;
- enjoy audio from discs, tapes, USB device, Micro SD card, and other external audio devices;
- program the play sequence of tracks.

What's in the box

Check and identify the contents of the package:

- Main unit
- Short User Manual

Overview of the main unit

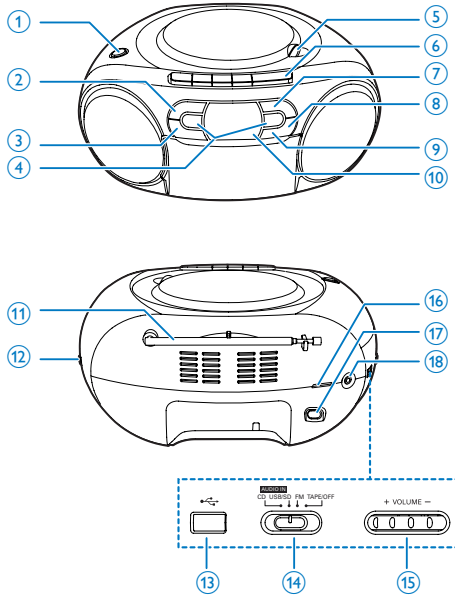

1 **SD/USB source selector**

- Press to select SD or USB source.
- ■ Stop playing.

2 **- ALBUM +**

- Skip to the previous or next album.

3 **⏮ / ⏭**

- Skip to the previous or next track.
- Search within a track.

4 **OPEN•CLOSE**

- Open or close the disc compartment.

5 **Tape controls**

- ◀
  Start tape play.
- ◀◀ / ▶▶
  Fast rewind or fast forward the tape. Stop the tape play or open the tape door.
- ❚❚
  Pause tape play or pause recording.

6 **▶❚❚**

- Start or pause play.

⑦ PROG
- Program the play sequence of tracks.

⑧ MODE
- Select a play mode.

⑨ Display panel
- Display current status.

⑩ FM antenna
- Improve FM reception.

⑪ + TUNING -
- Tune to FM radio stations.

⑫ ⇜
- USB socket.

⑬ Source selector
- Select a source.

⑭ + VOLUME -
- Adjust volume

⑮ SD
- Micro SD card slot.

⑯ AC~MAINS
- Power supply socket.

⑰ AUDIO-IN
- Connect an external audio device.

3 Get started

Caution

- Use of controls or adjustments or performance of procedures other than herein may result in hazardous radiation exposure or other unsafe operation.

Always follow the instructions in this chapter in sequence.

If you contact Philips, you will be asked for the model and serial number of your apparatus. The model number and serial number are on the bottom of your apparatus. Write the numbers here:

Model No. _____

Serial No. _____

Connect power

The unit can be powered by either AC power or batteries.

Option 1: AC power

Warning

- Risk of product damage! Make sure that the power supply voltage corresponds to the voltage printed on the back or the underside of the unit.
- Risk of electric shock! When you disconnect the AC power, always pull the plug from the socket. Never pull the cord.

Connect the AC power cord to the wall socket.

Tip

- To save energy, turn the unit off after use.

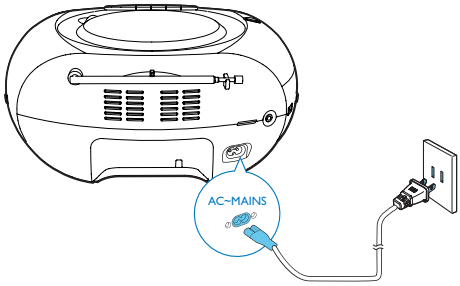

Option 2: Battery power

Caution

- Batteries contain chemical substances, so they should be disposed of properly.

Note

- Batteries are not supplied with the accessories.

1. Open the battery compartment.
2. Insert 6 batteries (type: 1.5V R14/UM2/C CELL) with correct polarity (+/-) as indicated.
3. Close the battery compartment.

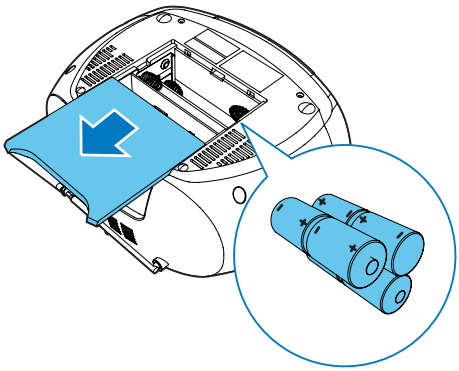

Turn on

Switch the source selector on the main unit to **FM/USB/SD/CD.**

↳ When the source selector is in the **CD** position, **CD** is displayed.

Switch to standby mode

- The unit switches to standby mode automatically when there is no audio detected for over 15 minutes.
- Press ▶II to wake up the unit from standby mode.

Turn off

Switch the source selector on the main unit to **OFF.**

4 Play

Play a CD

Note

- You cannot play CDs encoded with copyright protection technologies.
- When an audio-in cable is plugged, CD/USB playback stops, and the unit switches to audio in mode automatically.

You can play commercially available audio CDs:

- CD-Recordables (CD-R)
- CD-Rewritables (CD-RW)
- MP3-CDs

1 Switch the source selector to **CD**.

2 Open the CD compartment.

3 Insert a CD with the printed side facing up and close the CD lid gently.

↳ The total number of tracks displays.

↳ Your CD sound machine starts to play automatically.

- To select a track,press ⏮ / ⏭.
- To pause CD play, press ▶II.

↳ [▶] flashes.

- To resume CD play, press ▶II again.
- To stop CD play, press ■.

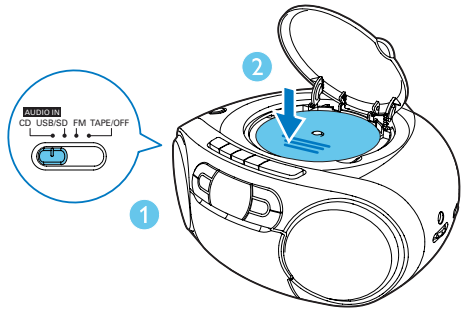

Play from an external device

You can also listen to an external audio device through this unit.

1 Connect an audio cable (3.5mm, not supplied) to:
- the **AUDIO-IN** socket on the unit.
- the headphone socket on an external device.

↳ "Au" shows on the display.

2 Play the external device (see the device's user manual).

Note

- The **AUDIO-IN** socket is not for headphones.
- The display panel lights off when the unit plays from the external device.
- The unit switches to Audio in mode automatically when it plays under CD or SD/USB mode.

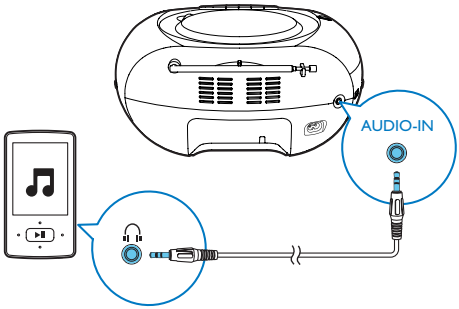

Play from USB devices

Note

- Make sure that the USB device contains playable audio content.

1 Switch the source selector to **USB/SD**.

2 Insert the USB device into the ⇠ socket.

3 Press down SD/USB source selector to choose USB source.

↳ "USB" shows on the display.

↳ The unit starts to play. If not, press ▶II.

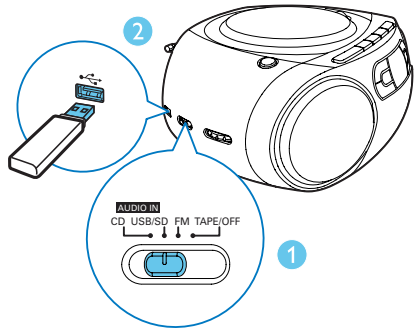

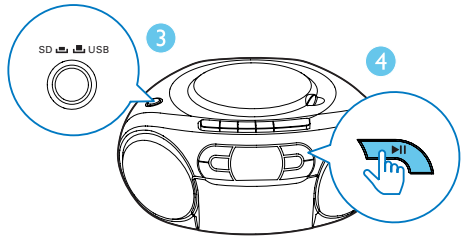

Play from SD card

Note

- Make sure that the SD card contains playable audio content.

1 Switch the source selector to **USB/SD** .

2 Insert the SD card into the SD slot on the back of the device.

3 Press to release the SD/USB source selector to choose SD source.

↳ "SD" shows on the display.

↳ The unit starts to play,If not, press ▶II.

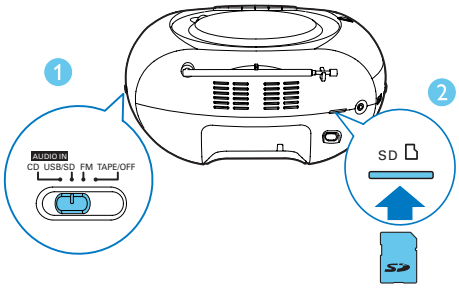

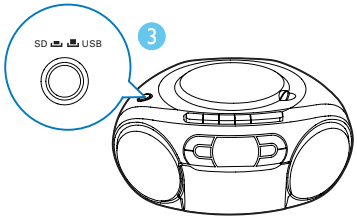

Play tape

1 Slide the source selector to **TAPE**.

2 Press ■ ▲ on main unit to open the tape door.

3 Load the tape with the open side upward and the full spool to the right.

4 Press ◀ on main unit to start play.
- To pause/resume play, press ❚❚ on main unit .
- To rewind or fast-forward, press ◀◀ / ▶▶ on main unit .
- To stop play, press ■ ▲.
- In playback mode, cassette will be stopped automatically when playback reaches the end.

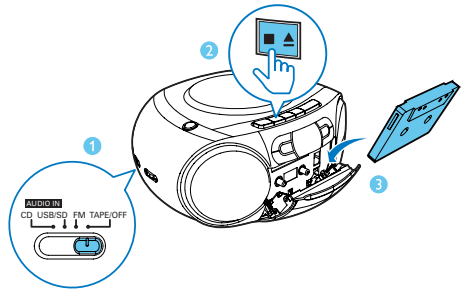

Tune to FM radio stations

Note

- For optimal reception, fully extend and adjust the position of the FM antenna.

1 Switch the source selector to **FM**.

2 Rotate **TUNING** to select a station.

3 Repeat step 2 to tune to more stations.

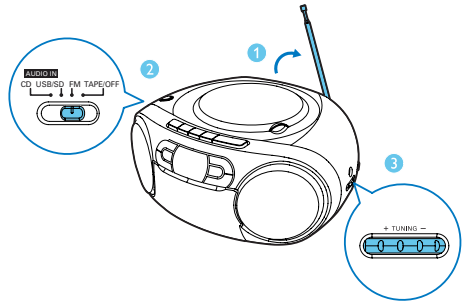

5 Play options

Control play

In CD mode, you can control play through the following operations.

⏮ / ⏭	Skip to the previous/next track or search within play.
▶❚❚	Start or pause play.
■	Stop play or erase a program.
PROG	Program the play sequence of tracks.
+VOLUME-	Adjust volume.
- ALBUM +	Skip the the previous or next album.
MODE	Select a play mode. [🔁]: Play the current track repeatedly. [🔁ALL]: Play all tracks repeatedly. [🔀 🔁ALL]: Repeat all tracks randomly. To return to normal play, press **MODE** repeatedly until the repeat icons disappear.

Tip

- Only [🔁]and [🔁ALL] can be selected when you play the programmed tracks.

Program tracks

In CD/USB/SD mode, you can program a maximum of 20 tracks.

1 Press ■ to stop playback.

2 Press **PROG** to activate the program mode.
↳ **[PROG]** (program) begin to blink.

3 Press ⏮ / ⏭ to select a track number, then press **PROG** to confirm.

4 Repeat steps 3 to program more tracks.

5 Press ▶❚❚ to play the programmed tracks.
↳ During play, **[PROG]** (program) is displayed.
- To erase the program, press ■ twice.
- When playback is stopped, press ⏮ / ⏭ to review the program.

Adjust sound

During play, you can adjust volume and select the sound effects.

Key	Function
+VOLUME-	Increase or decrease volume.

6 Product information

Note

- Product information is subject to change without prior notice.

Specifications

Amplifier

Max Output Power	2 x 1 W
Frequency Response	125 -16000 Hz, -3dB
Signal to Noise Ratio	>55 dBA
Total Harmonic Distortion	<1 %
Audio-in Input	650 mV RMS

Disc

Laser Type	Semiconductor
Disc Diameter	12cm/8cm
Support Disc	CD-DA, CD-R, CD-RW, CD-MP3
Audio DAC	24Bits / 44.1kHz
Total Harmonic Distortion	<1%
Frequency Response	125 -16000 Hz, -3dB
S/N Ratio	>55 dBA

Tuner

Tuning Range	87.5 - 108MHz
Total Harmonic Distortion	<3%
Signal to Noise Ratio	>50 dBA

Tape deck

Frequency response - Normal tape (type I)	125 - 8000 Hz (8 dB)
Signal-to-noise ratio - Normal tape (type I)	35 dBA
Wow and flutter	≤ 0.4% DIN

General

Power supply - AC Power	110- 127V~, 50/60 Hz;
- Battery	DC 9 V, 6 x 1.5 V type: R14/ UM2/C CELL
Operation Power Consumption	10 W
Standby Power Consumption	<0.5 W
Dimensions - Main Unit (W x H x D)	300 x 134 x 240 mm
Weight (Main Unit)	1.5 kg

Maintenance

Clean the cabinet

- Use a soft cloth slightly moistened with a mild detergent solution. Do not use a solution containing alcohol, spirits, ammonia or abrasives.

Clean discs

- When a disc becomes dirty, clean it with a cleaning cloth. Wipe the disc from the centre out.

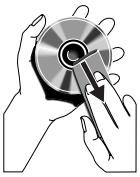

- Do not use solvents such as benzene, thinner, commercially available cleaners, or antistatic spray intended for analogue records.

Clean the disc lens

- After prolonged use, dirt or dust may accumulate at the disc lens. To ensure good play quality, clean the disc lens with Philips CD lens cleaner or any commercially available cleaner. Follow the instructions supplied with cleaner.

Clean the heads and the tape paths

- To ensure good recording and play quality, clean the heads **A**, the capstan(s) **B**, and pressure roller(s) **C** after every 50 hours of tape operation.
- Use a cotton swab slightly moistened with cleaning fluid or alcohol.

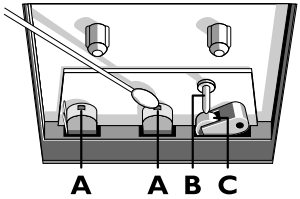

- You can also clean the heads by playing a cleaning tape once.

Demagnetise the heads

- Use a demagnetising tape available at your dealer.

7 Troubleshooting

Warning

- Never remove the casing of this device.

To keep the warranty valid, never try to repair the system yourself.

If you encounter problems when using this device, check the following points before requesting service. If the problem remains unsolved, go to the Philips Web page (www.philips.com/support). When you contact Philips, make sure that the device is nearby and the model number and serial number are available.

No power

- Ensure that the Mains cord is connected securely.
- Ensure that there is power at the AC Mains.
- Ensure that the batteries are inserted correctly.

No sound or poor sound

- Adjust the volume.

No response from the unit

- Disconnect and reconnect the AC power plug, then turn on the system again.
- As a power-saving feature, the unit switches off automatically 15 minutes after track play reaches the end and no control is operated.

Poor cassette sound quality

- Ensure that heads in the cassette holder are clean.
- Ensure that a NORMAL (IECI) cassette tape is used for record.

Cassette does not work for record

- Ensure that cassette tabs are not broken.

No disc detected

- Insert a disc.
- Check if the disc is inserted upside down.
- Wait until the moisture condensation at the lens has cleared.
- Replace or clean the disc.
- Use a finalized CD or correct format disc.

Poor radio reception

- Increase the distance between the unit and your TV or VCR.
- Fully extend the FM antenna.



Specifications are subject to change without notice
2014 © WOOX Innovations Limited.
All rights reserved.
Philips and the Philips' Shield Emblem are registered trademarks of Koninklijke Philips N.V. and are used by WOOX Innovations Limited under license from Koninklijke Philips N.V.

AZ329_96_UM_V1.0