Whirlpool

SENSING THE DIFFERENCE

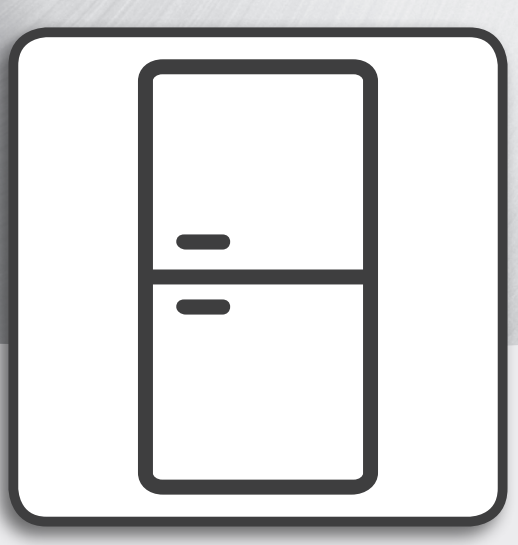

# **Health & Safety, Use and Care** and **Installation** guide

**www.whirlpool.eu/register**

**ENGLISH** .....3



Whirlpool
SENSING THE DIFFERENCE

# ENGLISH
# **HEALTH & SAFETY, USE & CARE** and **INSTALLATION** GUIDES



**THANK YOU FOR BUYING A WHIRLPOOL PRODUCT.**
In order to receive a more complete assistance, please register your appliance on **www.whirlpool.com**

***Index***

**SAFETY INSTRUCTIONS** . . . . 4
**SAFEGUARDING THE ENVIRONMENT** . . . . 6
**DECLARATION OF CONFORMITY** . . . . 6

***Use and Care guide***
**PRODUCT DESCRIPTION** . . . . 7
APPLIANCE . . . . 7
CONTROL PANEL . . . . 7
DOOR . . . . 8
REFRIGERATOR LIGHT . . . . 8
SHELVES . . . . 8
FAN + ANTIBACTERIAL FILTER . . . . 8
NO-FROST REFRIGERATOR COMPARTMENT . . . . 8
NO-FROST FREEZER COMPARTMENT . . . . 9
ACCESSORIES . . . . 9
**HOW TO USE THE APPLIANCE** . . . . 10
FIRST TIME USE . . . . 10
INSTALLATION . . . . 10
DAILY USE . . . . 11
FUNCTIONS . . . . 11
FOOD-STORAGE TIPS . . . . 13
RECOMMENDATION IN CASE OF NO USE OF THE APPLIANCE . . . . 17
**CLEANING AND MAINTENANCE** . . . . 18
**TROUBLESHOOTING GUIDE & AFTER-SALES SERVICE** . . . . 19
FUNCTIONAL SOUNDS . . . . 19
TROUBLESHOOTING GUIDE . . . . 20
AFTER-SALES SERVICE . . . . 22

***Installation guide*** . . . . 23



Whirlpool
SENSING THE DIFFERENCE

# SAFETY INSTRUCTIONS

## IMPORTANT TO BE READ AND OBSERVED

Before using the appliance carefully read these safety instructions.
Keep them close at hand for future reference.
These instructions and the appliance itself provide important safety warnings, to be observed at all times.
The manufacturer declines any liability for failure to observe these safety instructions, for inapropriate use of the appliance or incorrect setting of controls.

## SAFETY WARNINGS

Very young (0-3 years) and young children (3-8 years) shall be kept away from the appliance unless continuously supervised.
Children from 8 years old and above and persons with reduced physical, sensory or mental capabilities or lack of experience and knowledge can use this appliance only if they are supervised or have been given instructions on safe use and understand the hazards involved.
Children must not play with the appliance. Cleaning and user maintenance must not be carried out by children without supervision.

## PERMITTED USE

This appliance is solely for domestic, not professional use.
Do not use the appliance outdoors.
Do not store explosive or flammable substances such as aerosol cans and do not place or use gasoline or other flammable materials in or near the appliance: a fire may break out if the appliance is inadvertently switched on.

**CAUTION:** The appliance is not intended to be operated by means of an external timer or separate remote controlled system.
This appliance is intended to be used in household and similar applications such as:
– staff kitchen areas in shops, offices and other working environments;
– farm houses and by clients in hotels, motels and other residential type environments;
– bed and breakfast type environments;
– catering and similar non-retail applications.
The bulb used inside the appliance is specifically designed for domestic appliances and is not suitable for general room lighting within the home (EC Regulation 244/2009).
The appliance is arranged for operation in places where the temperature comes within the following ranges, according to the climatic class given on the rating plate. The appliance may not work properly if it is left for a long time at a temperature outside the specified range.
Climatic Class Amb. T. (°C)
SN From 10 to 32
N From 16 to 32
ST From 16 to 38
T From 16 to 43
This appliance does not contain CFCs. The refrigerant circuit contains R600a (HC).
Appliances with Isobutane (R600a): isobutane is a natural gas without environmental impact, but is flammable.
Therefore, make sure the refrigerant circuit pipes are not damaged. Keep special attention in case of damaged pipes emptying the refrigerant circuit.
**WARNING** : Do not damage the appliance refrigerant circuit pipes.
**WARNING** : Keep ventilation openings, in the appliance enclosure or in the built-in structure, clear of obstruction.
**WARNING** : Do not use mechanical, electric or chemical means other than those recommended by the Manufacturer to speed up the defrost process.
**WARNING** : Do not use or place electrical devices inside the appliance compartments if they are not of the type expressly authorised by the Manufacturer.
**WARNING** : Ice makers and or water dispencers not directly connected to the water supply must be filled with potable water only
**WARNING** : Automatic icemakers and/or water dispensers must be connected to a water supply that delivers potable water only, with main water pressure between 0,17 and 0,81 MPa (1,7 and 8,1 bar).
Do not swallow the contents (non-toxic) of the ice packs (in some models).
Do not eat ice cubes or ice lollies immediately after taking them out of the freezer since they may cause cold burns.
For products designed to use an air filter inside an accessible fan cover, the filter shall be always in position when the refrigerator is in function.
Do not store glass containers with liquids in the freezer compartment since they may break.
Do not obstruct the fan (if available) with food items.
After placing the food check if the door of compartments closes properly, especially the freezer door.
Damaged gasket must be replaced as soon as possible.
Use the refrigerator compartment only for storing fresh food and the freezer compartment only for storing frozen food, freezing fresh food and making ice cubes.
Avoid storing unwrapped food in

direct contact with internal surfaces of the refrigerator or freezer compartments.
Appliances could have special compartments (Fresh Food Compartment, Zero Degree Box,...).
In case not differently specified in the specific booklet of product, they can be removed, maintaining equivalent performances.
C-Pentane is used as blowing agent in the insulation foam and it is a flammable gas.

## INSTALLATION

Installation and repairs must be carried out by a qualified technician, in compliance with the manufacturer's instructions and local safety regulations. Do not repair or replace any part of the appliance unless specifically stated in the user manual.
Children should not perform installation operations. Keep children away during installation. Keep the packaging materials (plastic bags, polystyrene parts, etc.) out of reach of children, during and after the installation.
The appliance must be handled and installed by two or more persons. Use protective gloves to unpack and install the appliance.
Be careful not to damage the floors (e.g. parquet) when moving the appliance.
Install the appliance on a floor or support strong enough to take its weight and in a placesuitable for its size and use.
After unpacking the appliance, make sure that it has not been damaged during transport. In the event of problems, contact the dealer or your nearest Aftersales Service.
The appliance must be disconnected from the power supply before any installation operation.
During installation, make sure the appliance does not damage the power cable.
To guarantee adequate ventilation, leave a space on both sides and above the appliance.
The distance between the rear of the appliance and the wall behind the appliance should be 50mm, to avoid access to hot surfaces. A reduction of this space will increase the Energy consumption of product.
Only activate the appliance when the installation has been completed.
Wait at least two hours before switching the appliance on, to ensure that the refrigerant circuit is fully efficient.
Make sure the appliance is not near a heat source.

## ELECTRICAL WARNINGS

For installation to comply with current safety regulations, an omnipolar switch with minimum contact gap of 3mm is required and the appliance must be earthed.
If the fitted plug is not suitable for your socket outlet, contact a qualified technician.
The power cable must be long enough to connect the appliance, once fitted in its housing, to the main power supply. Do not pull the power supply cable.
If the power cable is damaged, replace with an identical one.
The power cable must only be replaced by a qualified technician in compliance with the manufacturer instruction and current safety regulations.
Contact an authorized service center.
For appliances with fitted plug, if the plug is not suitable for you socket outlet, contact a qualified technician.
Do not use extension leads, multiple sockets or adapters.
Do not operate this appliance if it has a damaged mains cord or plug, if it is not working properly, or if it has been damaged or dropped. Keep the cord away from hot surfaces.
The electrical components must not be accessible to the user after installation.
Do not touch the appliance with any wet part of the body and do not operate it when barefoot.

## CLEANING AND MAINTENANCE

Wear protective gloves for cleaning and maintenance.
The appliance must be disconnected from the power supply before any maintenance operation.
Never use steam cleaning equipment.
Do not use abrasive or harsh cleaners such as window sprays, scouring cleansers, flammable fluids, cleaning waxes, concentrated detergents, bleaches or cleansers containing petroleum products on plastic parts, interior and door liners or gaskets. Do not use paper towels, scouring pads, or other harsh cleaning tools.

# SAFEGUARDING THE ENVIRONMENT

## DISPOSAL OF PACKAGING MATERIALS

The packaging material is 100% recyclable and is marked with the recycle symbol.
The various parts of the packaging must therefore be disposed of responsibility and in full compliance with local authority regulations governing waste disposal.

## SCRAPPING OF HOUSEHOLD APPLIANCES

When scrapping the appliance, make it unusable by cutting off the power cable and removing the doors and shelves (if present) so that children cannot easily climb inside and become trapped.
This appliance is manufactured with recyclable or reusable materials. Dispose of it in accordance with local waste disposal regulations.
For further information on the treatment, recovery and recycling of household electrical appliances, contact your competent local authority, the collection service for household waste or the store where you purchase the appliance.
This appliance is marked in compliance with European Directive 2012/19/EU, Waste Electrical and Electronic Equipment (WEEE).

By ensuring this product is disposed of correctly, you will help prevent potential negative consequences for the environment and human health, which could otherwise be caused by inappropriate waste handling of this product..
The symbol on the product or on the accompanying documentation indicates that it should not be treated as domestic waste but must be taken to an appropriate collection center for the recycling of electrical and electronic equipment.

## ENERGY SAVING TIPS

Install the appliance in a dry, well ventilated room far away from any heat source (eg. radiator, cooker, etc.) and in place not exposed directly to the sun. If required, use an insulating plate.
To guarantee adequate ventilation follow installation instructions.
Insufficient ventilation on back of the product increases energy consumption and decreases cooling efficiency.
The internal temperatures of the appliance may be affected by the ambient temperature, frequency of door opening, as well as location of the appliance. Temperature setting should take into consideration these factors.

Reduce to a minimum door opening.
When thawing frozen food, place them in the refrigerator. The low temperature of the frozen products cools the food in the refrigerator.
Allow warm food and drinks to cool down before placing in the appliance.
Positioning of the shelves in the refrigerator has no impact on the efficient usage of energy. Food should be placed on the shelves in such way to ensure proper air circulation (food should not touch each other and distance between food and rear wall should be kept).
You can increase storage capacity of frozen food by removing baskets and, if present, Stop Frost shelve, maintaining an equivalent energy consumption.
High energy class products are fitted with high efficiency motors that remain operational for longer, but have a low power consumption. Do not worry if the engine continues to run for longer periods.

# DECLARATION OF CONFORMITY

This appliance has been designed, constructed and distributed in compliance with the requirements of European Directives:
LVD 2014/35/EU, EMC 2014/30/EU and RoHS 2011/65/EU).

This appliance has been designed, constructed and distributed in compliance with the Ecodesign and energy Labeling Requirements of EC Directives: 2009/125/EC and 2010/30/EU.

# PRODUCT DESCRIPTION

## APPLIANCE

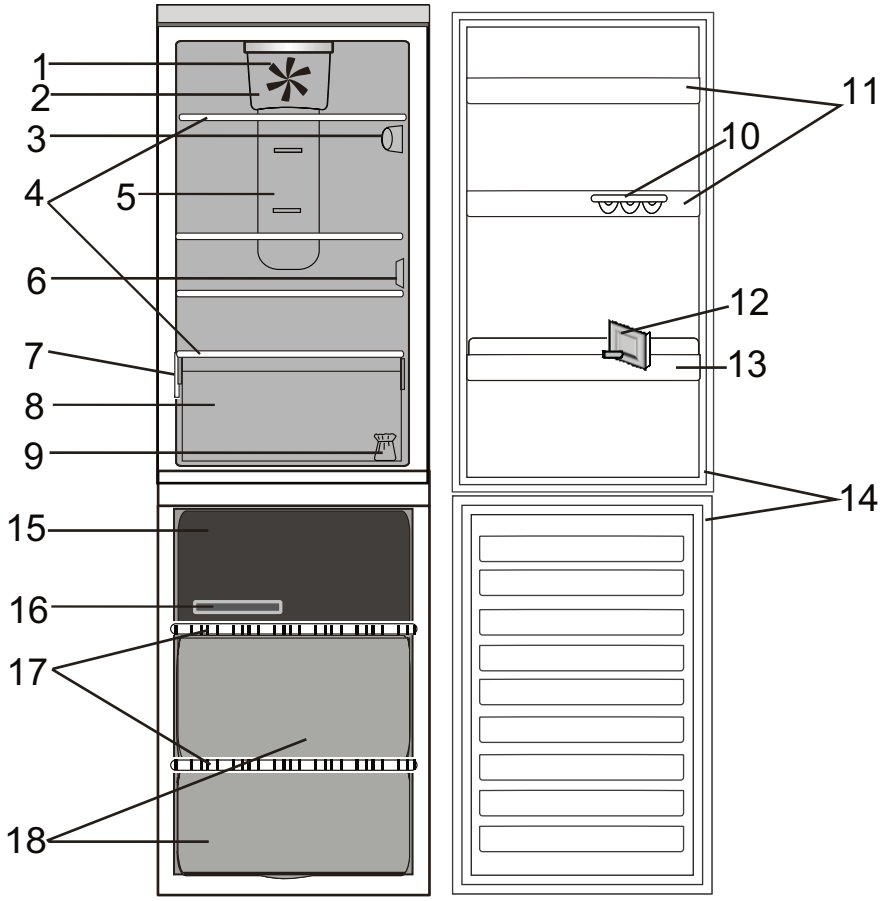


**Refrigerator compartment**
**1.** Fan
**2.** Fan cover and antibacterial filter area
**3.** Electronic control panel / light unit
**4.** Shelves
**5.** Multi-flow cold air area
**6.** Sensor cover
**7.** Rating plate with commercial name
**8.** Fruits and vegetables crisper
**9.** Door reversibility kit
**10.** Egg tray
**11.** Door trays
**12.** Bottle separator
**13.** Bottle balcony
**14.** Door seal
**Freezer compartment**
**14.** Door seals
**15.** Upper drawer: coolest zone best for freezing fresh food
**16.** Ice tray
**17.** Shelves
**18.** Freezer drawers

## CONTROL PANEL

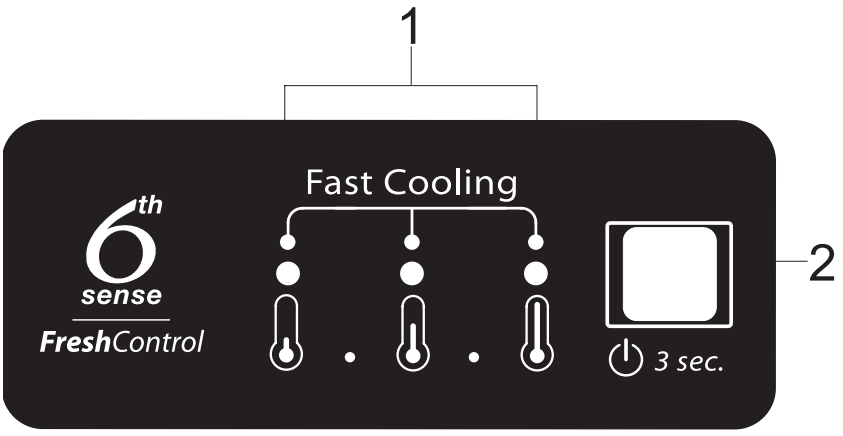


**1.** Indicator Leds (to display the current temperature setpoint or the Fast Cooling function)
**2.** On/Stand-By Button / Temperature Button



Whirlpool
SENSING THE DIFFERENCE

# DOOR

**DOOR REVERSIBILITY**

*Note:* The direction of door opening can be changed. If this operation is performed by After-sales Service it is not covered by the warranty.
Is recommended to reverse door swing by two persons.
Follow instruction in **Installation Guide.**

# REFRIGERATOR LIGHT

The light system inside the fridge compartment uses LEDs light, allowing a better lightning as well as very low energy consumption.
If the LED light system does not work, please contact the Service to replace it.

*Important:* The refrigerator compartment light switches on when the refrigerator door is opened. If the door is kept open for more than 4 minutes the light will be automatically switched off.

# SHELVES

All shelves, flaps and pull-out baskets are removable.

# FAN + ANTIBACTERIAL FILTER

The Fan improves temperature distribution inside the product, allowing better preservation of stored food.
*Note:* Do not obstruct the air intake area with food items.
If the appliance has the Fan it can be equipped with the antibacterial filter.
Remove it from the box placed in the crisper drawer and insert into the fan cover - as in the picture.
The replacement procedure is included in the filter box.

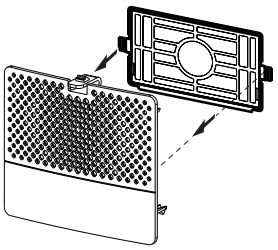

# NO-FROST REFRIGERATOR COMPARTMENT

Refrigerator compartment defrosting is completely automatic.

The defrost water is automatically run into a drain hole hiden behind Multi-flow and collected in a container, where it evaporates.

# NO-FROST FREEZER COMPARTMENT

No Frost freezers provide chilled air circulation around the storage areas, and prevent the formation of ice, thereby completely eliminating the need for defrosting.

Frozen items don't stick to the walls, labeling stays legible and storage space remains neat and clear.

# ACCESSORIES

**EGG TRAY**

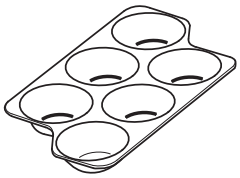

**BOTTLE SEPARATOR**

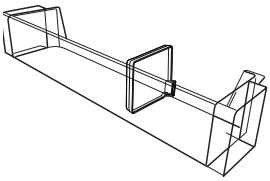

**ICE TRAY**

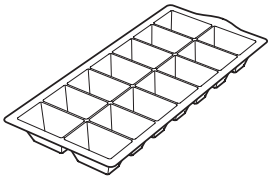



Whirlpool
SENSING THE DIFFERENCE

# HOW TO USE THE APPLIANCE

## FIRST TIME USE

### HOW TO START THE APPLIANCE

After plugging the appliance to the mains, it starts the operation automatically.
After starting the appliance, wait at least 4-6 hours before placing food into the appliance.

When the appliance is connected to the power supply, the display lights up and all the icons appear on the display for approximately 1 second. The default (factory) values of the fridge compartment settings light-up.

### TEMPERATURE SETTING

The appliance is normally factory-set for operation at the recommended medium temperature.
For details of setting temperature - see the Daily Reference Guide.

*Note:* Displayed set points correspond to the average temperature throughout the whole refrigerator

## INSTALLATION

### INSTALLING SINGLE APPLIANCE

To guarantee adequate ventilation, leave a space on both sides and above the appliance.
The distance between the rear of the appliance and the wall behind the appliance should be at least 50mm.
A reduction of this space will increase the Energy consumption of product.

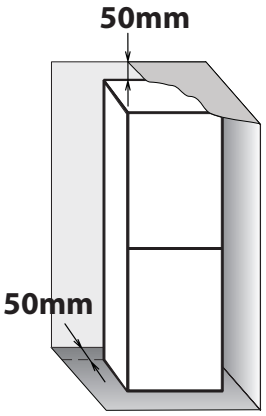

# DAILY USE

**HOW TO INCREASE FREEZER STORAGE CAPACITY**

- removing the baskets to allow the storage of big products.
- placing the food products directly on the freezer shelves.
- removing additional removable accessories.

- Do not block the air outlet area (on the back wall and on the bottom inside the product) with food products.
- All shelves and pull-out baskets are removable.

- The internal temperatures of the appliance may be affected by the ambient temperature, frequency of door opening, as well as location of the appliance. Temperature setting should take into consideration these factors.
- Unless otherwise specified the appliance accessories are not dishwasher safe.

**REMOVING THE FREEZER DRAWER CONTAINER**

- Open the freezer door
- Pull the upper container upwards by the right and left corners (1)
- Remove the drawer (2)

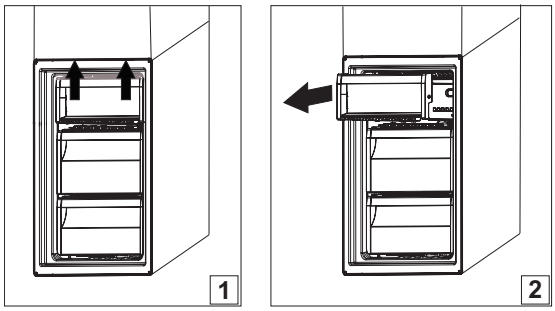


- Install the upper container in the reverse order

# FUNCTIONS

**ON/STANDBY**



This function turns On/Stand-by the refrigerator. To put the product in Stand-by, **press & hold the On/Stand-by button for 3 seconds**.
All the temperature indicators turn off.

When the appliance is in Stand-by, the light inside the refrigerator compartment does not work.
Remember that this operation does not disconnect the appliance from the power supply.
To switch the appliance On again, simply press the On/Stand-By button.

**6TH SENSE FRESH CONTROL**

This function allows optimum storage conditions (regarding temperature and humidity) to be quickly reached inside the appliance.

The 6th Sense Fresh Control works automatically.

**FAST COOLING**

The use of this function is recommended when placing a very high quantity of food in the refrigerator and freezer compartments.
Using Fast Cool function it is possible to increase the cooling capacity in the refrigerator and freezer compartments.
*Note:* Fast Cooling function should be also switched ON before placing fresh food to be frozen in the freezer compartment, in order to maximize the freezing capacity.



Whirlpool
SENSING THE DIFFERENCE

| | | |
|---|---|---|
| **DOOR OPEN ALARM** | The Door Open Alarm is activated when the door is left open for more than 3 minutes. | Indication of the alarm is shown by the blinking of the LED Door Light.<br>If the door is left open more than 4 minutes the LED Door Light switches off. |



Whirlpool
SENSING THE DIFFERENCE

# FOOD-STORAGE TIPS

## FRIDGE COMPARTMENT

The refrigerator is the ideal storage location for ready meals, fresh and preserved food, dairy products, fruit and vegetables and beverage.

## AIR VENTILATION

The natural circulation of air in the refrigerator compartment results in zones with different temperatures. It is coldest directly above the fruits and vegetables crisper and at the rear wall. It is warmest at the top front of the compartment.

Insufficient ventilation results in an increase in energy consumption and reduction of the refrigerating performance.
Do not cover air slots by food on other staff - they are optimized for proper air circulation and food preservation.

## HOW TO STORE FRESH FOOD AND BEVERAGE

› Use recyclable plastic, metal, aluminum and glass containers and cling film to wrap foods.

› Always use closed containers for liquids and for food that may give off or be tainted by odor or flavor transfer or cover them.

› Foods which give off a large amount ethylene gas and those that are sensitive to this gas, such as fruit, vegetables and salad, should always be separated or wrapped so as not to reduce the storage life; for example do not store tomatoes together with kiwi fruits or cabbage.

› Do not store food too close together to enable sufficient air circulation.

› To avoid bottles falling over, you can use the bottle holder.

› If you have a little quantity of food to store in the refrigerator, we recommend to use the shelves above the crisper for fruits and vegetables since this is the coolest area of the compartment.

› Be aware to do not close air slots by the food.

## WHERE TO STORE FRESH FOOD AND BEVERAGE

› On the fridge shelves: ready meals, tropical fruits, cheeses, deli.

› In the coldest area (the one above the fruits and vegetables crisper): meat, fish, cold cuts, cakes

› In the fruits and vegetables crisper: fruits, salad, vegetables.

› In the door: butter, jams, sauces, pickles, cans, bottles, beverage cartons, eggs.



Whirlpool
SENSING THE DIFFERENCE

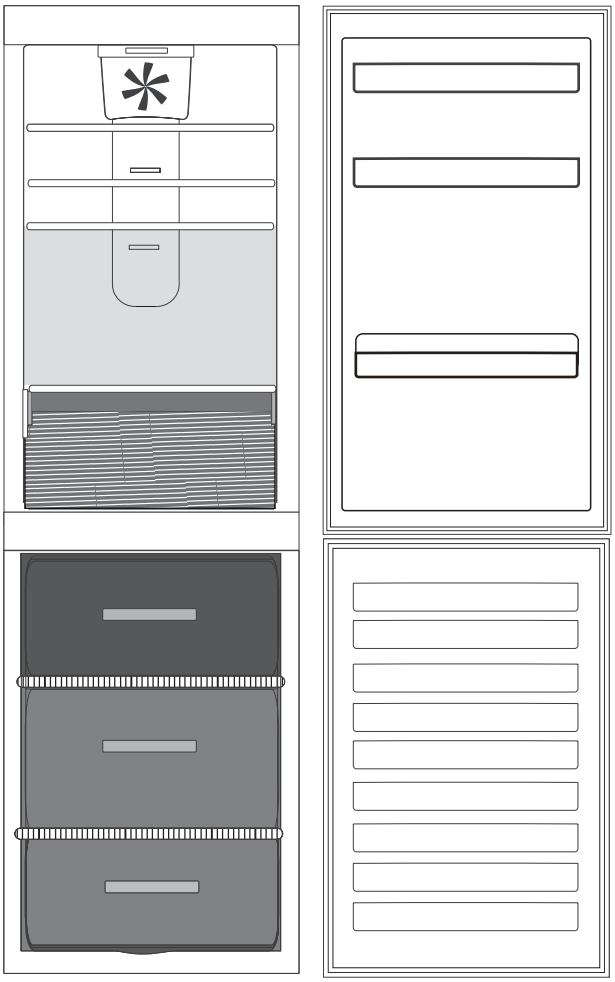

***Legend***

**TEMPERATE ZONE** Suggested For the storage of tropical fruit, cans, drinks, eggs, sauces, pickles, butter, jam.

**COOL ZONE** Suggested for storage of cheese, milk, dairy food, delicatessen, yogurt, cold cuts, desserts.

**FRUIT & VEGETABLE DRAWER**

**FREEZING ZONE DRAWER** (MAX COOL ZONE) Suggested to freeze fresh/cooked food.

**NORMAL FREEZER DRAWERS**

*Note*
The Grey tone of the legend doesn't match with the color of drawers



Whirlpool
SENSING THE DIFFERENCE

## FREEZER COMPARTMENT

The freezer is the ideal storage location for store frozen food, make ice cubes and freeze fresh food in the freezer compartment.
The maximum number of kilograms of fresh food that can be frozen within a 24-hour period is indicated on the rating plate (…kg/24h).
If you have a little quantity of food to store in the freezer, we recommend to use the coldest areas of your freezer compartment, corresponding to the upper area.

## TIPS FOR FREEZING AND STORING FRESH FOOD

› We recommend to label and date all your frozen food. Adding a label will help you to identify foods and to know when they should be used before their quality deteriorates.Do not re-freeze defrosted food.

› Before freezing, wrap and seal fresh food in: aluminium foil, cling film, air and water-tight plastic bags, polythene containers with lids or freezer containers suitable for freezing fresh food.

› Food must be fresh, mature and of prime quality in order to obtain high quality frozen food.

› Fresh vegetables and fruit should preferably be frozen as soon as they are picked to maintain the full original nutritional value, consistency, colour and flavor. Some meat, especially game, should be hung before it is frozen.

› Always leave hot food to cool before placing in the freezer.

› Eat fully or partially defrosted foods immediately. Do not refreeze unless the food is cooked after it has thawed. Once cooked, the thawed food can be refrozen.

› Do not freeze bottles with liquid.

› Please use Fast Cooling function to speed up cooling of freezing process (see Daily Reference Guide).

## FROZEN FOOD: SHOPPING TIPS

When purchasing frozen food products:

› Ensure that the packaging is not damaged (frozen food in damaged packaging may have deteriorated). If the package is swollen or has damp patches, it may not have been stored under optimal conditions and defrosting may have already begun.

› When shopping, buy frozen foods at the end of your trip and transport them in a thermally insulated cool bag.

› Once at home, place the frozen foods immediately in the freezer.

› If food has defrosted even partially, do not re-freeze it. Consume within 24 hours.

› Avoid or reduce temperature variations to the minimum. Respect the best-before date on the package.

› Always observe the storage information on the package.

## STORAGE TIME OF FROZEN FOOD

| **MEAT** | *months* |
|---|---|
| Beef | 8 - 12 |
| Pork, veal | 6 - 9 |
| Lamb | 6 - 8 |
| Rabbit | 4 - 6 |
| Mince/Offal | 2 - 3 |
| Sausages | 1 - 2 |
| **POULTRY** | |
| Chicken | 5 - 7 |
| Turkey | 6 |
| Giblets | 2 - 3 |
| **CRUSTACEANS** | |
| Molluscs creab, lobster | 1 - 2 |
| Crab, lobster | 1 - 2 |
| **SHELLFISH** | |
| Oyster, Shucked | 1 - 2 |
| **FISH** | |
| "fatty" (salmon, herring, meckerel) | 2 - 3 |
| "lean" (code, sole) | 3 - 4 |

| **STEWS** | *months* |
|---|---|
| Meat, Poultry | 2 - 3 |
| **DAIRY PRODUCTS** | |
| Butter | 6 |
| Cheese | 3 |
| Double Cream | 1 - 2 |
| Ice-cream | 2 - 3 |
| Eggs | 8 |
| **SOUPS AND SAUCES** | |
| Soup | 2 - 3 |
| Meat Sauce | 2 - 3 |
| Pate | 1 |
| Ratatouille | 8 |
| **PASTRY AND BREAD** | |
| Bread | 1 - 2 |
| Cakes (plain) | 4 |
| Gateaux (cakes) | 2 - 3 |
| Crepes | 1 - 2 |
| Uncooked pastry | 2 - 3 |
| Quiche | 1 - 2 |
| Pizza | 1 - 2 |

| **FRUITS** | *months* |
|---|---|
| Apples | 12 |
| Apricots | 8 |
| Blackberries | 8 - 12 |
| Blackcurrants / Redcurrants | 8 - 12 |
| Cherries | 10 |
| Peaches | 10 |
| Pears | 8 - 12 |
| Plum | 10 |
| Raspberries | 8 - 12 |
| Strawberries | 10 |
| Rhubarb | 10 |
| Fruit juices (orange, lemon, grapefruit) | 4 - 6 |
| **VEGETABLES** | |
| Asparagus | 8 - 10 |
| Basil | 6 - 8 |
| Beans | 12 |
| Artichokes | 8 - 10 |
| Broccoli | 8 - 10 |
| Brussels sprout | 8 - 10 |
| Cauliflower | 8 - 10 |
| Carrots | 10 - 12 |
| Celery | 6 - 8 |
| Mushrooms | 8 |
| Parlsey | 6 - 8 |
| Peppers | 10 - 12 |
| Peas | 12 |
| Runner-beans | 12 |
| Spinach | 12 |
| Tomatoes | 8 - 10 |
| Zucchini | 8 - 10 |

# RECOMMENDATION IN CASE OF NO USE OF THE APPLIANCE

**ABSENCE / VACATION**

In case longer absence its recommended to use up food and to disconnect the appliance to save energy.

**MOVING**

**1.** Take out all internal parts.

**2.** Wrap them well, and fix them together with adhesive tape so that they do not bang together or get lost.

**3.** Screw the adjustable feet so that they do not touch the support surface.

**4.** Close and fix door with adhesive tape and, again using adhesive tape, fix the power cable to the appliance.

**POWER FAILURE**

In the event of a power failure, call the local office of your electricity supply company and ask how long it is going to last.

*Note:* Bear in mind that a full appliance will stay cold longer than a partially filled one.

If ice crystals are still visible on the food, it may be frozen again, although flavour and aroma may be affected.

If food is found to be in a poor condition, it is best to throw it away.

*For power failures lasting up to 24 hours.*
Keep the door of the appliance closed. This will allow the stored food to stay cold as long as possible.

*For power failures lasting more than 24 hours.*
Empty the freezer compartment and arrange the food in a portable freezer. If this type of freezer is not available and, likewise, no artificial ice packs are available, try to use up the food, which is more easily perishable.

Empty the ice tray.

# CLEANING AND MAINTENANCE

**⚠ WARNING**

Before any cleaning or maintenance operation, unplug the appliance from the mains or disconnect the electrical power supply.

Never use abrasives. Never clean refrigerator parts with flammable fluids.

**⚠ WARNING**

Do not use steam cleaners.

The buttons and control panel display must not be cleaned with alcohol or alcohol-derived substances, but with a dry cloth.

› Periodically clean the appliance with a cloth and a solution of lukewarm water and neutral detergent specifically for refrigerator interiors.

› Clean the outside of the appliance and the door seal with a damp cloth and dry with a soft cloth.

› Condenser placed in the rear of the appliance should be cleaned regularly using a vacuum cleaner.

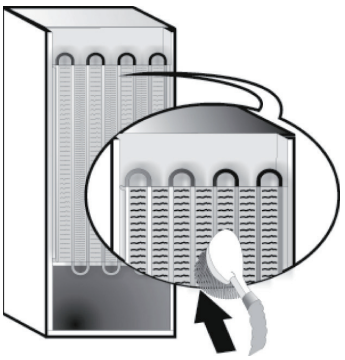

*Important:*

› The buttons and control panel display must not be cleaned with alcohol or alcohol-derived substances, but with a dry cloth.

› The refrigeration system pipes are located near the defrost pan and can become hot. Periodically clean them with a vacuum cleaner.

# TROUBLESHOOTING GUIDE & AFTER-SALES SERVICE

**BEFORE CONTACTING AFTER-SALES SERVICE...**

Performance problems often result from little things you can find and fix yourself without tools of any kind.

## FUNCTIONAL SOUNDS

Sounds coming from your appliances are normal since it has a number of fans and engines to regulate performances that switch on and off automatically.

**SOME OF THE FUNCTIONAL SOUNDS CAN BE REDUCED THROUGH:**

› Leveling the appliance and installing it on an even surface.

› Separating and avoiding contact between the appliance and furniture.

› Checking if the internal components are correctly placed.

› Checking if bottles and containers are not in contactwith each other.

**SOME OF THE FUNCTIONAL SOUNDS YOU MIGHT HEAR**

A hissing sound when switching on the appliance for the first time or after a long pause.




A gurgling sound when refrigerant fluid enters into the pipes.




BRRR sound is from the compressor running.




Buzzing sound when water valve or fan start working.




A cracking sound when compressor starts.




The CLICK is from the thermostat which adjusts how often the compressor is running.






Whirlpool
SENSING THE DIFFERENCE

# TROUBLESHOOTING GUIDE

| *Problem* | *Possible Cause* | *Solution* |
|---|---|---|
| **THE APPLIANCE IS NOT WORKING** | There may be an appliance power supply problem. | › Check if power cable plugged into a live socket with the proper voltage.<br>› Check if the protection devices and fuses of the electrical system in your home |
| **THERE IS WATER IN THE DEFROST PAN** | This is normal in hot, damp weather. The pan can even be half full. | › Make sure the appliance is level so that the water does not overflow. |
| **THE EDGES OF THE APPLIANCE CABINET, WHICH COME IN CONTACT WITH THE DOOR SEAL, ARE WARM TO THE TOUCH** | This is not a defect.<br>This is normal in hot weather and when the compressor is running. | |
| **THE LIGHT DOES NOT WORK** | The light may need replacing.<br><br>The appliance may be in On/ Stand-by model | › Make sure if the protection devices and fuses of the electrical system in your home work well.<br>› Check if the power cable is plugged into a live socket with the proper voltage<br>› In case the LEDs are broken the user must call the Service for exchange of the same type available only at our After-sales Service Centers or authorized dealers. |
| **THE MOTOR SEEMS TO RUN TOO MUCH** | Motor running time depends on different things: number of door openings, amount of food stored, temperature of the room, setting of the temperature controls. | › Make sure that the appliance controls are correctly set.<br>› Check if there is not a large amount of food been added to the appliance.<br>› Check that the door is not opened too often.<br>› Check that the door close properly. |

| | | |
|---|---|---|
| **THE APPLIANCE TEMPERATURE IS TOO HIGH** | There could be various causes (see “Solutions”) | › Make sure that the condenser (back the appliance) is free of dust and fluff.<br>› Make sure that the door properly closed.<br>› Make sure that the door seals properly fitted.<br>› On hot days or if the room is warm, the motor naturally runs longer.<br>› If the appliance door has been left open for a while or if large amounts of food have been stored, the motor will run longer in order to cool down the interior of the appliance. |
| **THE DOORS DO NOT OPEN AND CLOSE PROPERLY** | There could be various causes (see “Solutions”) | › Check that food packages are not blocking the door.<br>› Check that the internal parts or automatic ice maker are not out of position.<br>› Check that the door seals are not dirty or sticky.<br>› Ensure the appliance is level. |

# AFTER-SALES SERVICE

**BEFORE CALLING THE AFTER-SALES SERVICE**

**1.** See if you can solve the problem by yourself with the help of the suggestions given in the **TROUBLESHOOTING GUIDE**.

**2.** Switch the appliance off and back on again to see if the fault persists

**IF AFTER THE ABOVE CHECKS THE FAULT STILL OCCURS, GET IN TOUCH WITH THE NEAREST AFTER-SALES SERVICE**

To receive assistance, call the number shown on the warranty booklet or follow the instructions on the website **www.whirlpool.eu**

Always specify:
- a brief description of the fault;
- the type and exact model of the appliance;
- the service number (number after the word Service on the rating plate). The service number is also indicated on the guarantee booklet;
- your full address;
- your telephone number.




If any repairs are required, please contact an authorised after-sales service (to guarantee that original spare parts will be used and repairs carried out correctly).

**Manufacturer:**
**Whirlpool Europe s.r.l. - Socio Unico**
**Viale Guido Borghi 27**
**21025 Comerio (VA)**
**Italy**

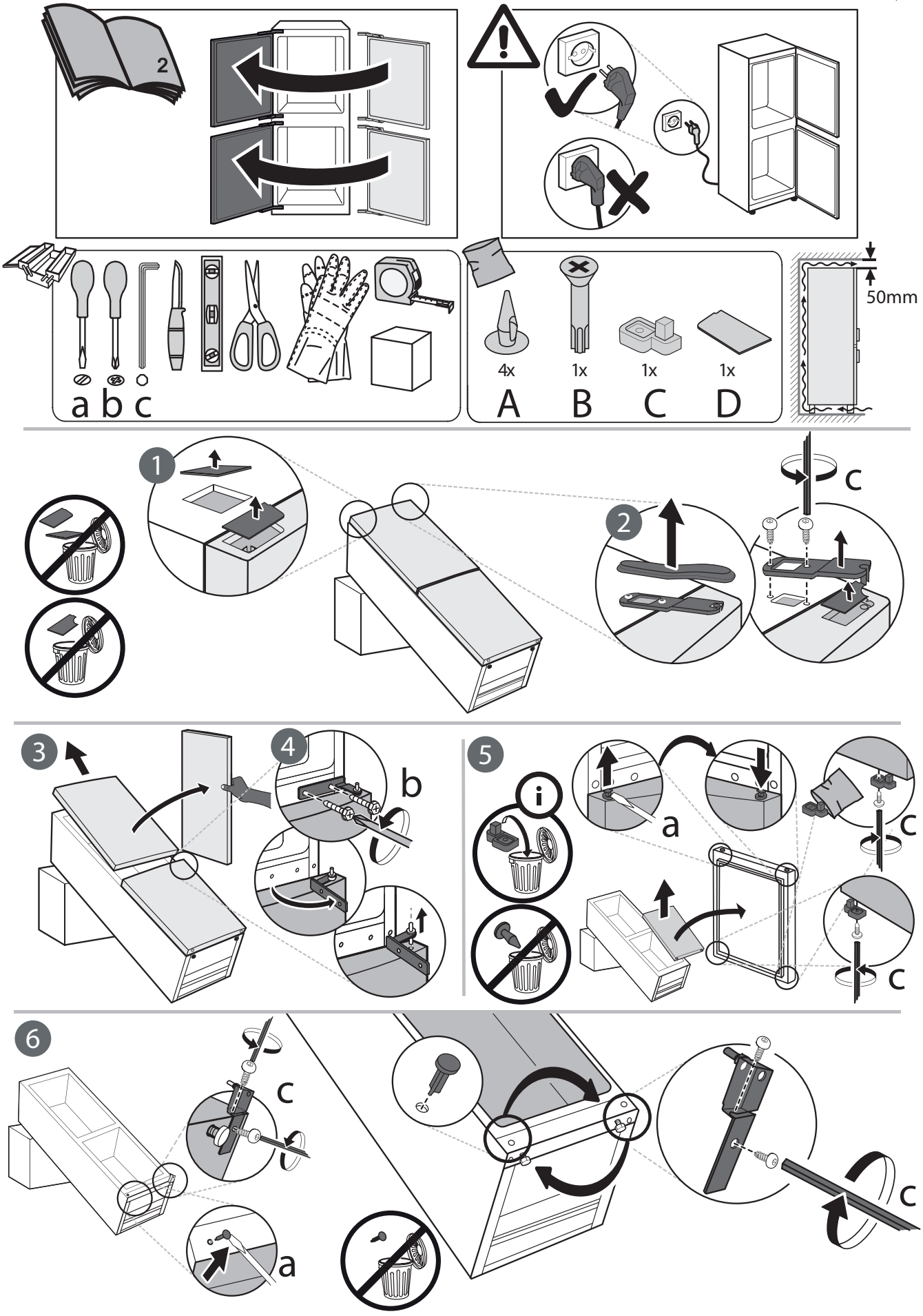




Whirlpool
SENSING THE DIFFERENCE

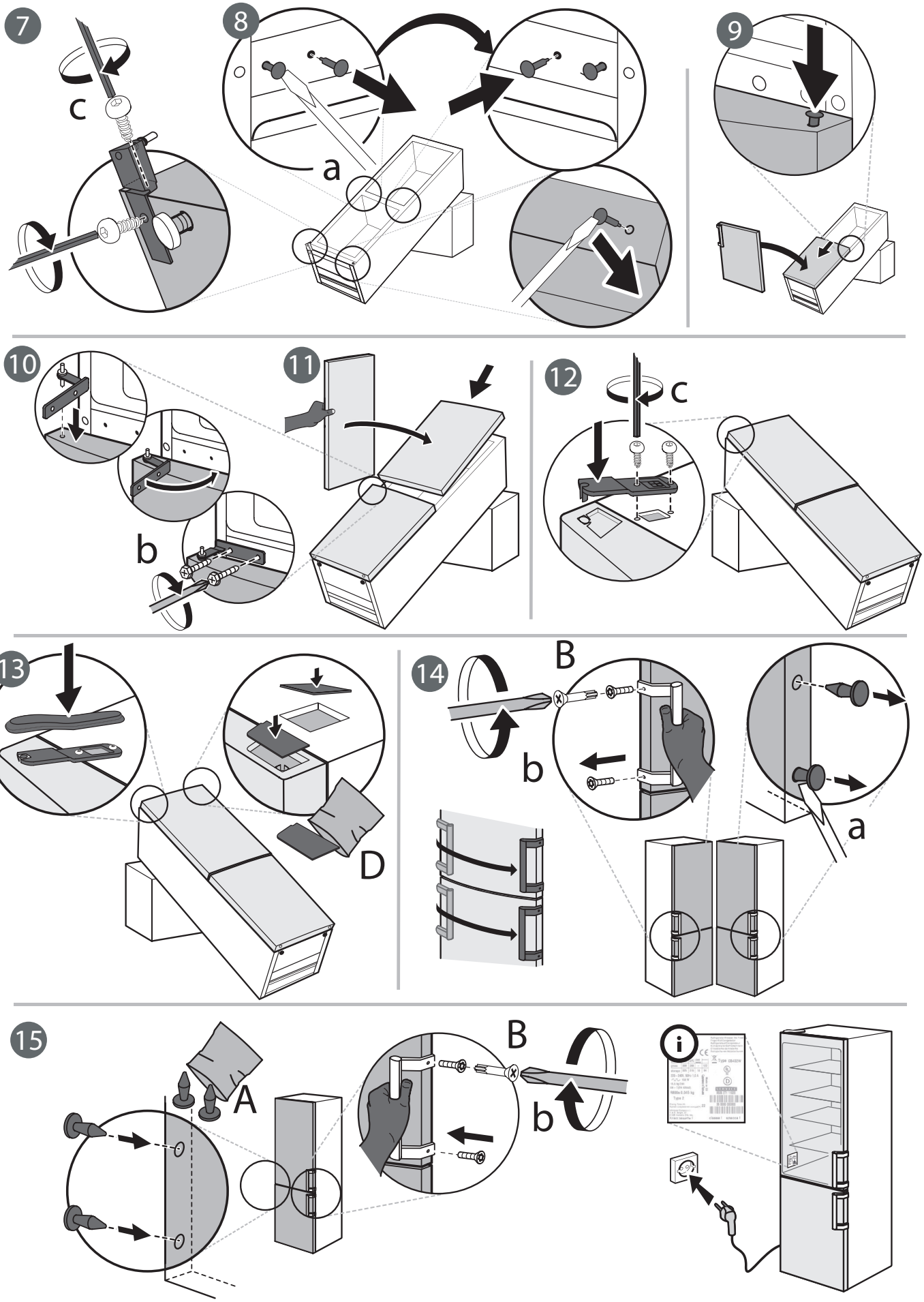




Whirlpool

SENSING THE DIFFERENCE

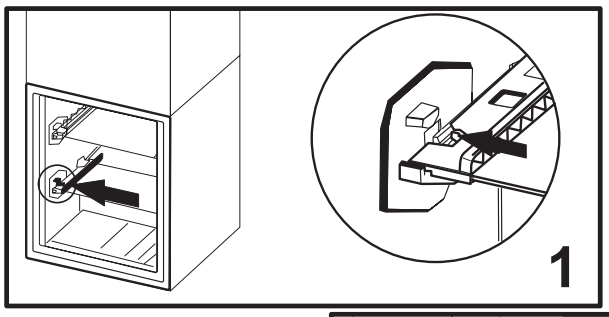


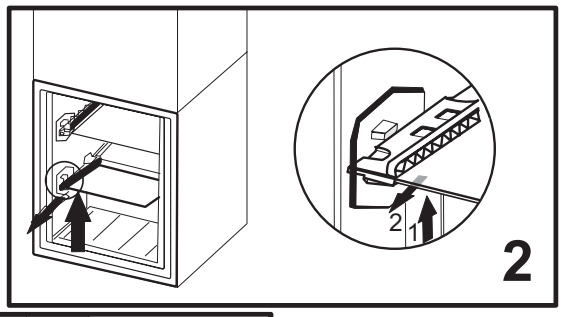


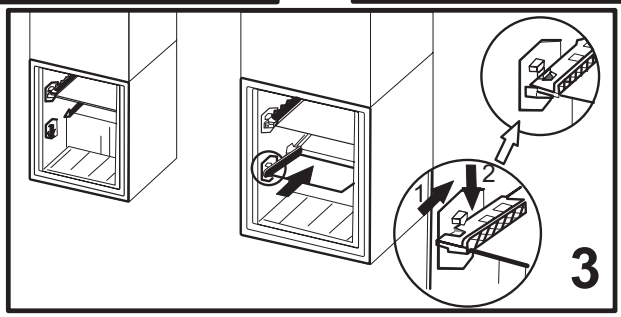


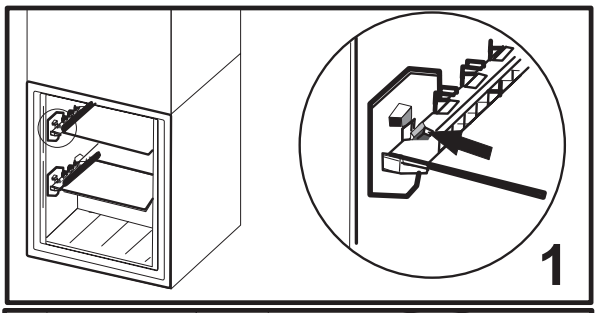


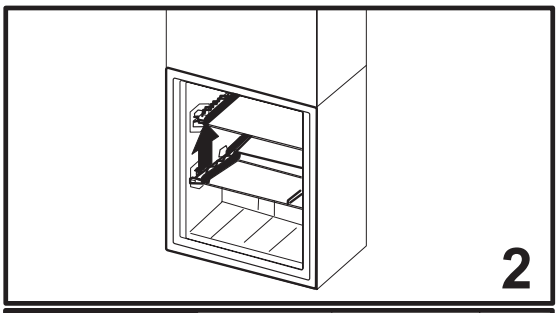


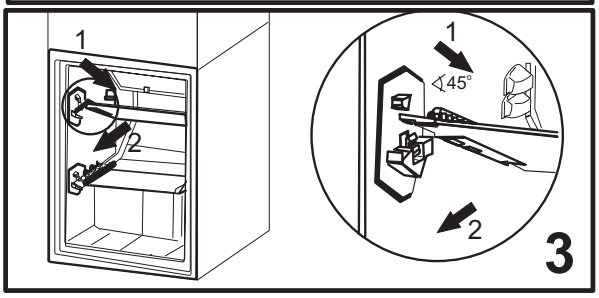


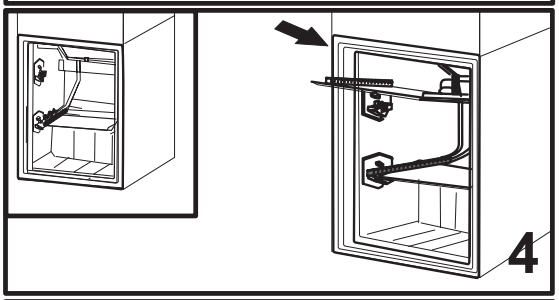


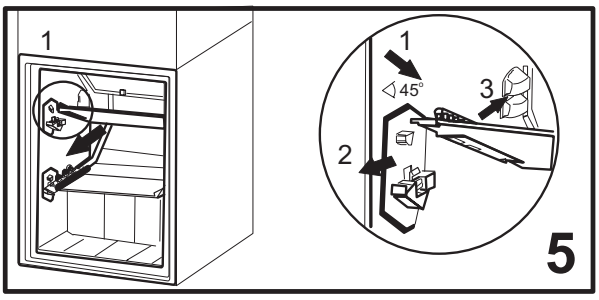


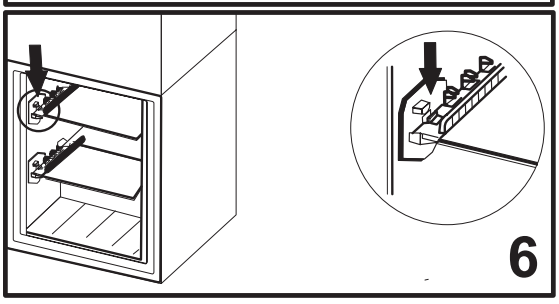


EN

**400010871395**

Whirlpool® is a registered trademark of Whirlpool, USA



Whirlpool

SENSING THE DIFFERENCE