gorenje

GB IE

User manual
Installation instruction
Conversion instruction

BG6xA
BG6xB
BG6xC
BG6xD
BG6xE
BG6xF

Pictograms used:



Important information



Tip



Gas connection



Electrical connection

✓ Right

✗ Wrong

CONTENTS

Safety regulations

Safe use 4
Children and vulnerable people 7

User manual

Models 8
Description 8
Information according regulation (EU) 66/2014 8
Use 9
Faults table 10

Installation instruction

Safety regulations 11
Service 11
Preparations for installation 12
Sealing tape 13
Gas connection 14
Built in 14
Connecting & testing 14

Conversion instruction

Conversion instruction 15
Conversion table 15
Power table (kW) 16
Converting nozzles 17
Converting by-pass screws 17
Check for gas tightness and operation 18
Start up 19
Checking operation 19

Environmental considerations

Disposal of packaging and appliance 20

READ CAREFULLY AND KEEP FOR FUTURE REFERENCE!

Safe use



- The manufacturer cannot be held liable for any damage resulting from failure to follow the safety instructions and warnings.
- Damage caused by incorrect connection, incorrect fitting, or incorrect use is not covered by the warranty.
- **WARNING**: this appliance and the accessible parts will become hot during use. Do not touch hot parts. Keep children younger than 8 away from the appliance unless they are under continuous supervision.
- **WARNING**: danger of fire: never leave anything on the hob.
- **CAUTION**: The cooking process has to be supervised. A short term cooking process has to be supervised continuously.
- **WARNING**: cooking with fat or oil on a hob without supervision can be dangerous and can lead to fire.
- **NEVER** try to extinguish a fire with water. Instead, switch the appliance off and then cover the flames with for example a lid or a fire blanket.
- Never flambé under a cooker hood. The high flames can cause a fire, even if the cooker hood is switched off.
- **WARNING**: use only hob guards designed by the manufacturer of the cooking appliance or indicated by the manufacturer of the appliance in the instructions for use as suitable or hob guards incorporated in the appliance. The use of inappropriate guards can cause accidents.
- The hob is only to be used for the preparation of food. The unit is not designed for heating rooms.

- Do not warm closed tins on the hob. There will be a build-up of pressure that will cause tins to explode. You might get injured or scalded.
- Never cover the appliance with a cloth or something similar. If the appliance is still hot or is switched on, there is a risk of fire.
- Do not use the appliance as a worktop. The appliance may accidentally be switched on or still be hot, which means objects could melt, become hot or catch fire.
- Do not use the appliance in temperatures below 5 °C.
- The appliance should not be placed or used outdoors.
- When you use the hob for the first time you will notice a “new smell”. Don’t worry, this is normal. If the kitchen is well ventilated, the smell will soon disappear.
- The appliance is not intended to be operated by means of an external timer or separate remote control system.
- Never open the casing of the appliance.
- Never use a pressure cleaner or steam cleaner to clean the hob.
- The ceramic top is extremely strong, but not unbreakable. For example, a spice jar or sharp utensil falling on it could cause it to break.



- **WARNING** “In case of hotplate glass breakage”:
  - shut immediately off all burners and any electrical heating element and isolate the appliance from the power supply.
  - do not touch the appliance surface.
  - do not use the appliance.

- **CAUTION**: The use of a gas cooking appliance results in the production of heat, moisture and products of combustion in the room in which it is installed. Ensure that the kitchen is well ventilated especially when the appliance is in use. Keep natural ventilation holes open or install a mechanical ventilation device (mechanical extractor hood).
- The burner components are hot during and immediately after use. Do not touch them, and avoid contact with non-heat resistant materials.
- Never immerse hot burner caps and pan supports in cold water. The rapid cooling can damage the enamel.
- The distance between the pan and a knob or non-heat resistant wall should always be greater than two centimetres. In case of smaller distances the high temperature may cause the knobs or wall to discolour and/or deform.
- Always use the pan supports and suitable cookware.
- Always place the pan on the pan support. Placing the pan directly on the burner cap can result in dangerous situations.
- Aluminium trays or foil are not suitable as cooking utensils. They can burn into the burner caps and pan supports.
- The hob can only function effectively if the burner components have been assembled using the guide ridges. Ensure that the pan supports lie properly against each other and flat on the drip tray. Only then can the pans be positioned stably.
- Keep oven gloves or oven cloths away from the flame.

Children and vulnerable people



- This appliance can be used by children aged 8 years and over, as well as by people with reduced physical, sensory or mental capabilities or lack of experience and knowledge, provided they are supervised and instructed in the safe use of the appliance and understand the hazards involved.
- Do not allow children to play with the appliance. Do not allow children to clean or maintain the appliance unless supervised.
- Do not keep objects that children might find interesting in cupboards above or behind the appliance.
- The cooking zones/burners heat up during use and stay hot for a while afterwards. Keep young children away from the hob during and immediately after cooking.

Models

Aa - Auxiliary burner
Bb - Semi-rapid burner
Cc - Rapid burner
Dd - Wok burner

BG6xD

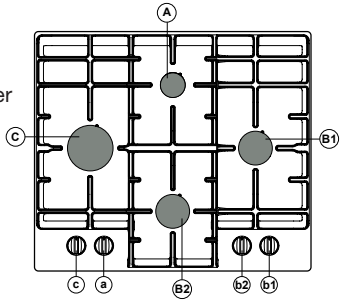

BG6xE / BG6xF

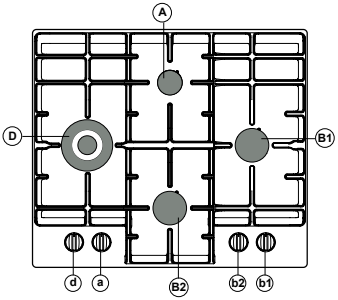

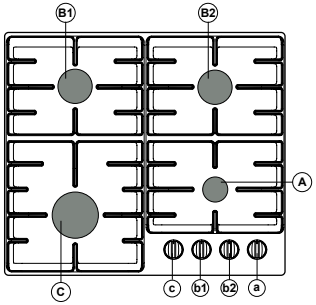

BG6xA

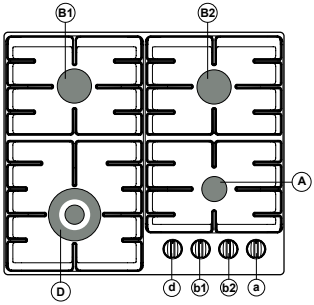

BG6xB / BG6xC

Description

	G20 / 20 mbar			
	Burner	**BG6xA BG6xD**	**BG6xB BG6xE**	**BG6xC BG6xF**
Aa	Auxiliary	0.30 kW – 1.00 kW	0.30 kW – 1.00 kW	0.30 kW – 1.00 kW
Bb	Semi-rapid	0.45 kW – 1.80 kW	0.45 kW – 1.80 kW	0.45 kW – 1.80 kW
Cc	Rapid	0.75 kW – 3.00 kW		
Dd	Wok		1.50 kW – 3.50 kW	1.50 kW – 4.05 kW

Information according regulation (EU) 66/2014

Measurements according EN60350-2

Model identification		**BG6xA / BG6xD**	**BG6xB/BG6xC BG6xE/BG6xF**
Type of hob		Gas hob	Gas hob
Number of gas burners		4	4
Heating technology		Gas burner	Gas burner
Energy efficiency per gas burner ($EE_{gas\ burner}$) in %	Semi-rapid burner: Rapid burner: Wok burner:	58.8 56.3	58.8 55.4
Energy efficiency for the gas hob ($EE_{gas\ hob}$) in %		58.0	57.7

Use

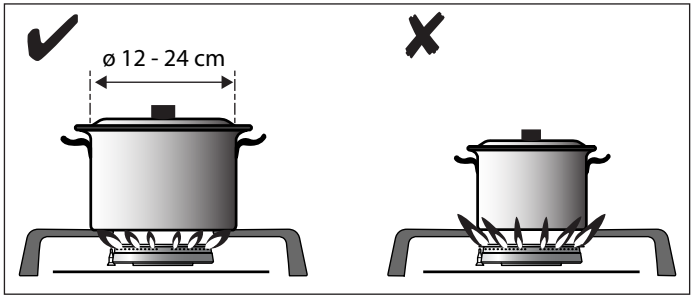

Control:
(1) Push
(2) Turn left + hold
(3) Hold down 3 sec.

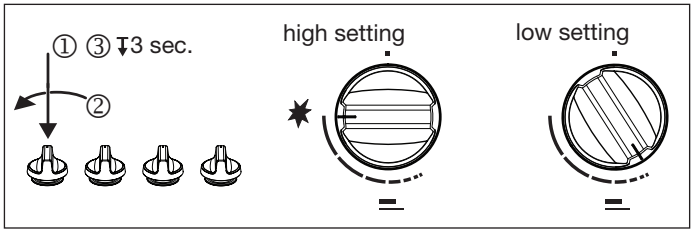

Accessories:



Burner position:

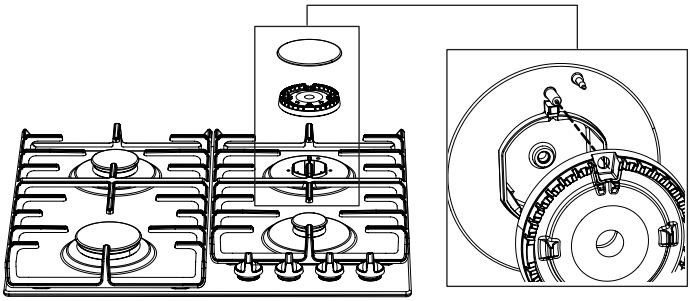

Cleaning:

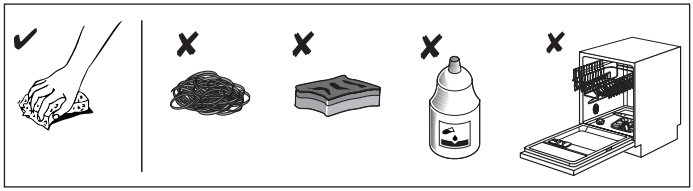

Faults table

Following is some advice on rectifying some common problems.

What happened...?	Possible cause	What to do?
The burners will not burn. The flame is uneven / unstable.	Flame is uneven due to a wrong gas power setting.	Have an expert check the gas pipeline!
The flame from the burners suddenly changes.	Wrongly assembled parts of the kitchen hob.	Assemble the burner correctly.
Burner ignition takes more time.	Wrongly assembled parts of the kitchen hob.	Assemble the burner correctly.
The flame is extinguished shortly after ignition.	Knob pressed too short or to weakly.	Keep the knob pressed for a longer period of time.
The grid has discolored in the burner area?	This is a commonplace phenomenon resulting from high temperature.	Clean the grid with a metal care detergent.
Electric power supply in general is interrupted?	The fuse may be blown.	Check the fuse in the fuse box and replace it if it is blown.
Electric ignition of the burners no longer works?	There are food or detergent residues between the spark plug and the burner.	Open and carefully clean the opening between the spark plug and the burner.
The burner cover looks unappealing.	Regular dirt.	Clean the burner covers with a metal care detergent.

A visit by a service technician during the warranty period will be charged if the appliance is not functioning because of improper use. Store these instructions in a place where they are always readily accessible; if you pass the appliance on to another person, the instructions should also be included.

If the problem persists despite observing the instructions above, call an authorized service technician. Elimination of any errors or warranty claims that resulted from improper connection or use of the appliance is not covered by our warranty. In such cases, the costs of repair are borne by the user.

Safety regulations



- This appliance should only be connected by a registered installer.
- Prior to installation, ensure that the local distribution conditions (voltage, frequency, nature of the gas and gas pressure) and the adjustment of the appliance are compatible.
- This Appliance must be earthed.
- The voltage, frequency, power, type of gas and the country for which the appliance has been designed are shown on the appliance rating plate.



- Elektrical connection Class I - 220-240 V - 50/60 Hz - max 1 W
  The electrical connection must comply with national and local regulations.
- The wall plug socket and plug should always be accessible.
- If a stationary appliance is not fitted with a supply cord and a plug, or with other means for disconnection from the supply mains having a contact separation in all poles that provide full disconnection under overvoltage category III conditions, the means for disconnection must be incorporated in the fixed wiring in accordance with the wiring rules. Using an omnipolar switch with a contact separation of at least 3 mm fitted in the supply cable will fulfil this requirement.
- The connection cable must hang freely and should not be fed through a drawer.



- Gas connection 1/2” ISO 228 / ISO 7-1 / EN 10226-1
  The gas connection must comply with national and local regulations. See appliance label for technical gas data.
- This appliance is not connected to a combustion products evacuation device. It shall be installed and connected in accordance with current installation regulations. Particular attention shall be given to the relevant requirements regarding ventilation.
- We recommend that the gas hob be connected by means of a fixed pipe. Connection using a specially designed safety hose is also permitted.
- The pipe behind the oven must be made entirely out of metal.
- A safety hose may not be bent and must not come into contact with moving parts of kitchen units.
- The gas supply valve must always be placed in an easily accessible position.
- The worktop into which the hob is fitted should be flat.
- The walls and the worktop surrounding the appliance must be heat resistant up to at least 85 °C. Even though the appliance itself does not get hot, the heat of a hot pan could discolour or deform the wall.

Service



- Faulty parts may only be replaced by original parts. The manufacturer can only guarantee that original parts meet safety requirements.
- If the supply cord is damaged, it must be replaced by the manufacturer, its service agent or similarly qualified persons in order to avoid a hazard.

Preparations for installation

Free space around appliance

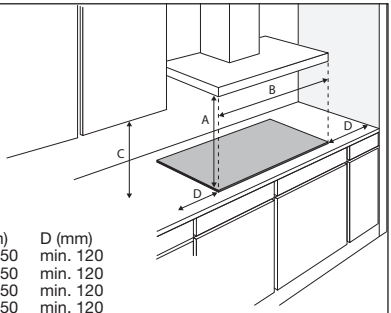

	A (mm)	B (mm)	C (mm)	D (mm)
BG3	min. 650	min. 600	min. 450	min. 120
BG6	min. 650	min. 600	min. 450	min. 120
BG7	min. 650	min. 750	min. 450	min. 120
BG9	min. 650	min. 900	min. 450	min. 120

Dimensions

Appliance:

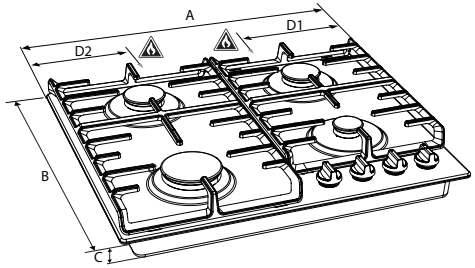

	A (mm)	B (mm)	C (mm)	D1 (mm)	D2 (mm)
BG3	300	520	52	138	-
BG6xA/B/C	600	520	52	-	138
BG6xD/E/F	600	520	52	138	-
BG7	750	520	52	138	-
BG9	900	520	52	138	-

Built-in:

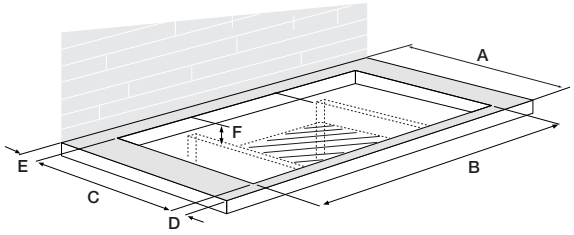

	A (mm)	B (mm)	C (mm)	D (mm)	E (>mm)	F
BG3	600	260	490	60	50	90
BG6	600	560	490	60	50	90
BG7	600	560	490	60	50	90
BG9	600	860	490	60	50	90

Accessibility

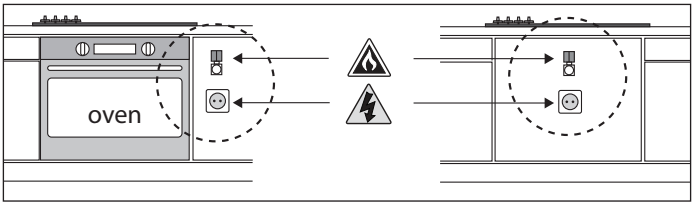

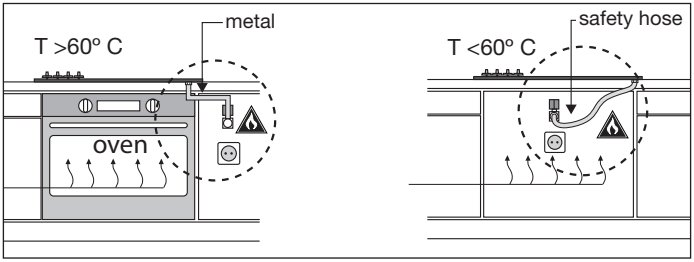

Sealing tape

Stainless steel drip tray



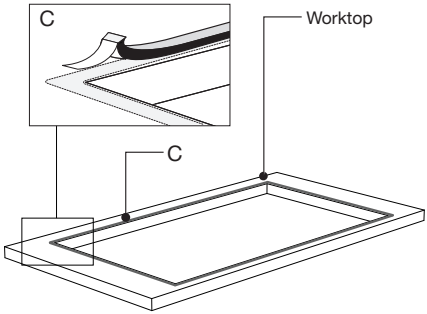

Glass drip tray

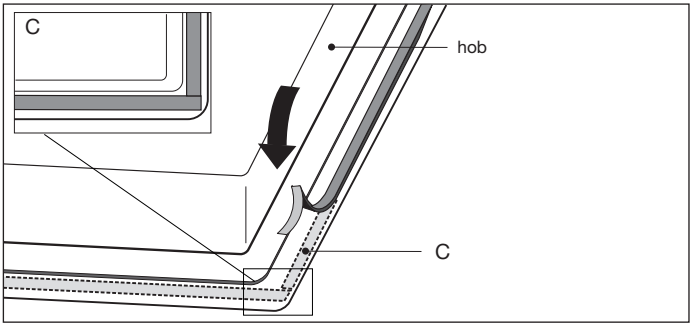

Gas connection

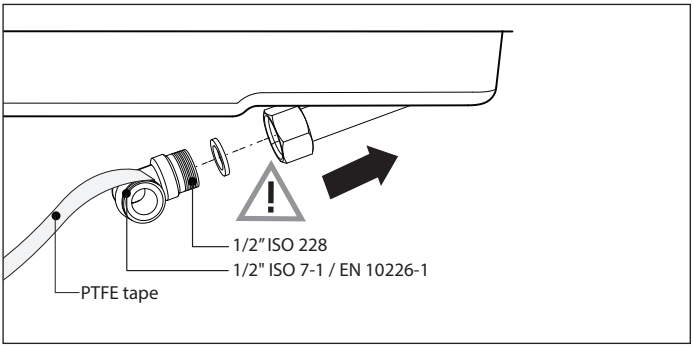

Built in

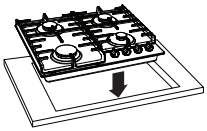

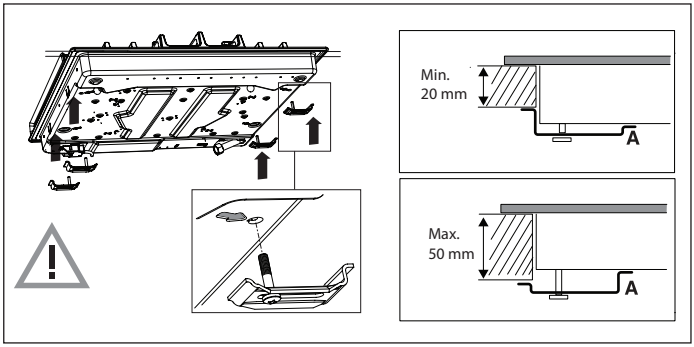

Connecting & testing

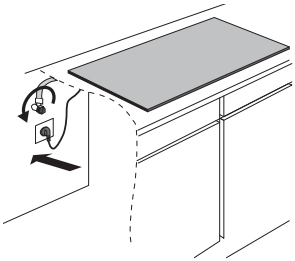

Check if connections are gastight.

Conversion instruction

Adjusting for a different gas type!



Attention!
Performing of these instructions by a non-qualified engineer can lead to dangerous situations.



The supplier is not responsible for the consequences (the arising of a hazardous situation and/or damage to persons or goods) caused by incorrect performance of these instructions by engineers who are not employees of the supplier. Consequential damage arising through inexpert performance of these instructions is not accepted.

With this conversion-set your gas hob can be converted to different gasses. See conversion Table.

Conversion table

Gas type	P mBar	Modification	Auxiliary		Semi rapid		Rapid	
			nozzle	by-pass	nozzle	by-pass	nozzle	by-pass
G20	20	-	72	30	97	33	128	42
Convert from G20 / 20 mbar to:								
G20	13	Replace nozzle & no action by-pass	84	30	115	33	145	42
G25	20	Replace nozzle & no action by-pass	77	30	105	33	134	42
G30/ G31	28-30/37	Replace nozzle & screw in bypass (see 3A)	50	30	65	33	85	42
G150	8	Replace nozzle & adjust bypass (see 3C)	145	30	200	33	290	42

Gas type	P mBar	Modification.	Wok (BG6xB/E)		Wok (BG6xC/F)	
			nozzle	by-pass	nozzle	by-pass
G20	20	Replace nozzle & no action by-pass	140	63	153	63
Convert from G20 / 20 mbar to:						
G20	13	Replace nozzle & no action by-pass	155	63	170	63
G25	20	Replace nozzle & no action by-pass	143	63	152	63
G30/G31	28-30/37	Replace nozzle & screw in bypass (see 3A)	94	63	100	63

Power table (kW-gr/h):

	G20 13 mbar	G25 20 mbar	G30-G31 28-30/37 mbar	G150 8 mbar
Auxiliary burner	1.05	1.05	1.05/76	1.10
Semi-rapid burner	1.95	1.95	1.80/130	1.85
Rapid burner	3.10	3.10	3.00/216	3.00
Wok burner BG6xB/E)	3.45	3.35	3.50/252	
Wok burner (BG6xC/F)	4.00	3.85	4.00/288	

Contents of conversion set

- Nozzles for burners and (if applicable) by-pass screws for gas taps.
- Data label with the modified gas specifications and setting.

Tools needed:

T1 Socket spanner (7mm)

T2 Screw driver flat blade (4mm)

T3 Nose pliers

T4 Open end spanner (7mm)

T5 Leak test spray

Converting nozzles

Please note: disconnect the appliance from the power supply. Prevent damage of the worktop. Lay down parts of the appliance on a protected base.

For converting to a different type of gas, the nozzles have to be changed. The values are also marked on the nozzle.

1. Remove pan supports, burner heads, crowns and covers (see pictures A1 and A2). Pull off the control knobs vertically.
2. Use the socket (T1) or open end spanner (T4) to remove the old nozzles and place the new nozzles inside the burner cups (see pictures A1 and A2).

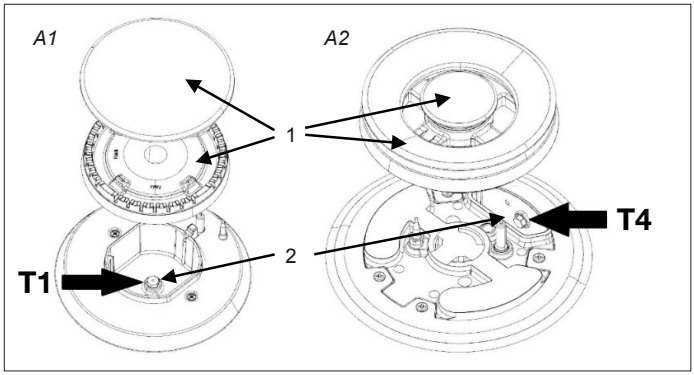

Converting by-pass screws

Depending on the gas type to which the appliances will be converted, there are two ways to adjust the by-pass screws.

Please check the conversion table in the column “Modification” if the by-pass screws have to be screwed completely in (see action 3A below), replaced by a different by-pass screw (see action 3B below) or adjusted (see action 3C below).

The values are also indicated on the top of the by-pass screws.
The by-pass screws can be reached from the top of the hob when the knobs are completely removed (B1and B2).

3A. Screw the by-pass screws (3) of all gas taps completely in by using the flat-blade screwdriver (T2).

3B. Remove the by-pass screws by using the flat-blade screwdriver (T2) and the nose pliers (T3). Place the new by-pass screws with the nose pliers and screw the by-pass screws of all gas taps completely in, by using the flat-blade screwdriver.

3C. Adjust the by-pass screws (3) of all gas taps by using the flat-blade screwdriver (T2) until a stable flame is established with a minimal gas flow. Please check if the flame is stable in cold and hot condition of the burner.

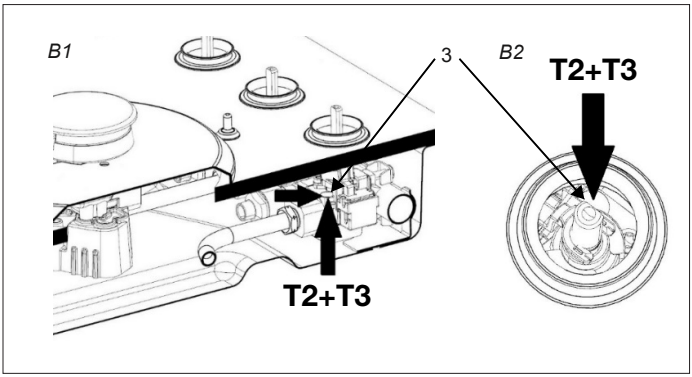

Check for gas tightness and operation

When the appliance is connected to the gas supply, use leak test spray to check the gas tightness:

1. Seal the injector.
2. Open the gas tap.

Attention: press and open tap to override the thermo-electric safety device and keep it pressed down.

3. Spray leak test spray over all gas connections and check for gas tightness.
4. Repeat for every burner.

Start up

1. Reinstall the knobs, burner parts and pan supports.
2. Check if the appliance is connected to the correct gas type and pressure.
3. Open the main gas valve.
4. Insert the plug into the power socket.

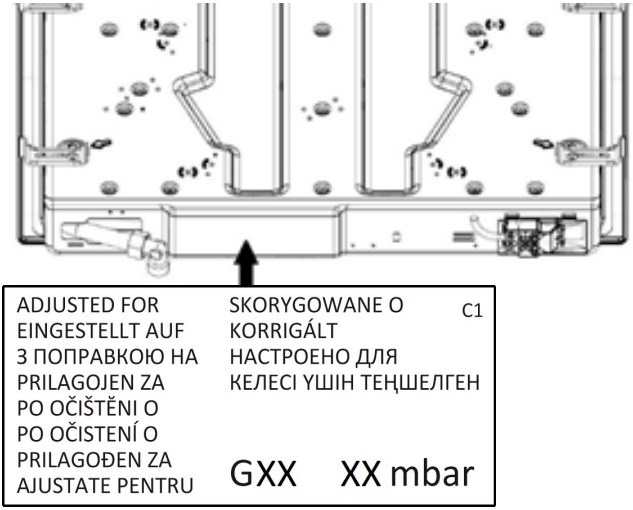

Checking operation

1. Ignite the burners.
2. Check whether the flame profile is normal, uniform and stable for the complete ratio:
   - Check if the flame does not smother in simmer rate;
   - Check if the flames are not ‘blowing off’ at maximum rate;
   - No long, yellow flames should be visible during operation.
3. Paste the data label with the modified gas specifications and setting over the current data label with old specification (at the under site of the appliances nearby the gas connection).

Disposal of the appliance and packaging

Sustainable materials have been used during manufacture of this appliance.

The appliance packaging is recyclable. The following may have been used:

- cardboard;
- paper;
- polyethylene film (PE);
- CFC-free polystyrene (PS-rigid foam);
- polypropylene tape (PP).

Dispose of these materials in a responsible manner and in accordance with government regulations.

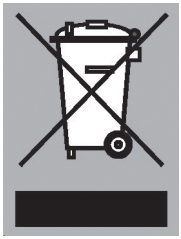

To designate the requirement for separate collection of household electrical appliances, the symbol of a crossed-out dustbin is applied to the product.
This means that at the end of its working life, the product must not be disposed of as urban waste. It must be taken to a special local authority differentiated waste collection centre or to a dealer providing this service. Disposing of a household appliance such as this hob separately avoids possible negative consequences for the environment and health and enables the constituent materials to be recovered, resulting in significant savings in energy and resources.



Please note! Do not throw a broken ceramic glass plate in the glass recycling bin but take this to the Municipality's waste recycling centre.

Declaration of conformity



We hereby declare that our products satisfy the applicable European directives, orders and regulations, as well as the requirements stated in the referenced standards.

Gorenje gospodinjski aparati, d.d., Slovenija
Address: Partizanska 12, 3503 Velenje, Slovenia
Phone: +386 (0)3 899 10 00
Fax: +386 (0)3 899 28 00
www.gorenje.com

gorenje

573158 en (05-17)

573158 / VER 2 / 06-02-2017