PHILIPS

hue

Buratto double spotlight

Hue White Ambiance

- Dimmer switch included
- GU10
- White
- Smart control with Hue Bridge*

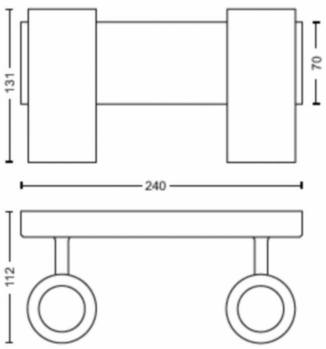

5046231P7





Light for your moments

The Philips Hue white ambience Buratto spot lights come with a wireless dimmer switch and a white ambience GU10 LED bulb that helps you to relax, read, concentrate and energise. Enjoy natural white light that adjusts to your daily routines.

Light for your moments

- Relax, read, concentrate and energise with light recipes
- Easy and wireless control with the dimmer switch (included)

High-quality light and design

- High light output

Full control from a smart device with the Hue bridge

- Full control from a smart device with the Hue bridge
- Create your ambience with warm white to cool daylight
- Control it your way
- Smart control, home and away
- Set timers for your convenience
- Wake up and go to sleep naturally

Issue date: 2026-03-11 Version: 0.315

Highlights

Light for your daily routines

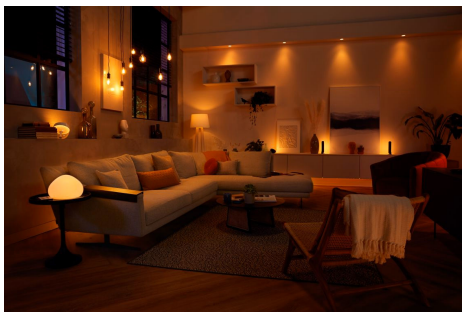

Light influences our mood and behaviour. Philips Hue can help you to customise your daily routines into moments that you can enjoy. Skip your morning coffee and get ready for the day with cool, bright-white daylight that helps to energise your body and mind. Stay focused with finely tuned bright-white light. Or put your feet up and relax with a soft glow of white light for the perfect end to the day.

Dimmer switch (included)



With the battery-powered dimmer switch for Philips Hue, you can control the light of your white ambience lamps easily. Cycle through the four different light scenes by simply pressing the on button, dim the light up or down and settle for ease of use. The dimmer switch can be placed anywhere in its small and elegant dock and needs no wiring. Use as a remote control or as a light switch against the wall and enjoy the right light recipe for every moment of your day. You can add up to 10 Hue lights to one dimmer switch.

High light output



High-quality light with strong light output, providing plenty of white light for any moment or task.

Full control with the Hue bridge



Connect your Philips Hue lights with the bridge to unlock the endless possibilites of the system.

Create your ambience



Set the right ambience for any moment and decorate your home with warm to cool white light. Enjoy different styles throughout the year, whether it's the crisp white light reminding you of a spring breeze, the warm white light of a summer sun or the ice cool daylight of winter.

Control it your way



Connect your Philips Hue lights with the bridge and start discovering the endless possibilities. Control your lights from your smartphone or tablet via the Philips Hue app, or add switches to your system to activate your lights. Set timers, notifications, alarms and more for the full Philips Hue experience. Philips Hue even works with Amazon Alexa, Apple Homekit and Google Home to allow you to control your lights with your voice.

Smart control, home and away



With the Philips Hue iOS and Android apps you can control your lights remotely, from wherever you are. Check if you have forgotten to switch your lights off before you left home, and switch them on if you are working late. Connection with the Philips Hue bridge is required for this functionality.

Timers for your convenience

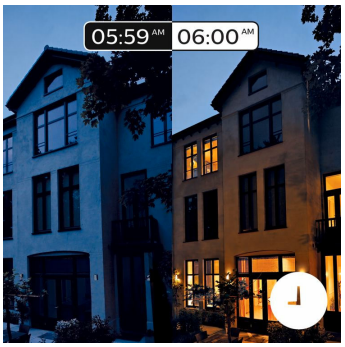

Philips Hue can make it seem like you're at home when you're not, using the schedule function in the Philips Hue app. Set the lights to come on at a pre-set time, so the lights are on when you arrive home. You can even set rooms to light up at different times. And of course, you can let the lights turn off gradually during the night, so you never have to worry whether you've left any lights on. Connection with the Philips Hue bridge is required for this functionality.

Wake up and go to sleep



Philips Hue will help to get you out of bed the way you like it, helping you start your day feeling refreshed. The light's brightness increases gradually, mimicking the effect of sunrise and helps you wake up naturally, instead of being woken up by the loud sound of an alarm clock. Start your day the right way. In the evening, the relaxing warm white light helps you to unwind, relax and prepare your body for a good night’s sleep. Connection with the Philips Hue bridge is required for this functionality.

Specifications

Design and finishing
- Colour: White
- Material: Metal

Durability
- Nominal lifetime: 15,000

Extra feature/accessory incl.
- Adjustable spot head: Yes
- click!FIX mounting: Yes
- Dimmable with the Hue app and switches: Yes
- Hue Switch: Yes
- LED integrated: No
- LED lamp(s) included: Yes

Light characteristics
- Colour temperature: 2200-6500 K

Miscellaneous
- Especially designed for: Living Room and Bedroom
- Style: Modern
- Type: Spot Light
- EyeComfort: No

Product dimensions and weight
- Net weight: 1.145 kg
- Height: 11.2 cm
- Length: 24 cm
- Width: 13.1 cm

Service
- Warranty: 2 year(s)

Technical specifications
- Total lumen output fixture (hidden): 700
- Lumen output bulb included: 350
- Light source equivalent to traditional bulb of: 50
- Total lumen output fixture: 500 lm
- Bulb technology: LED
- Light colour: Tunable white light
- Mains power: 50-60 Hz
- Fitting/cap: GU10
- Wattage bulb included: 5 W
- Maximum wattage replacement bulb: 5.5
- IP code: IP20 | Finger-protected
- Class of protection: Class I – Earthed
- Light source replaceable: Yes
- Number of light sources: 2

What's supported

- Compatible with Effects feature: Yes
- Philips Hue App: Android 10.0 and above, IOS 15 and above
- WiFi: Works without Wi-Fi
- Defined support period: Minimum of 48 months after introduction date
- Max. number of accessories: 12 (with Hue Bridge)
- Communication protocol: Bluetooth, Zigbee
- Compatibility with third-party systems: Alexa, Google Home, Apple HomeKit, IFTTT, Klikaanklikuit, Matter, Samsung SmartThings, Sonos

Box specifications

Packaging dimensions and weight

- EAN/UPC - product: 8718696164068
- Net weight: 1.15 kg
- Gross weight: 1.43 kg
- Height: 109 mm
- Length: 198 mm
- Width: 253 mm



© 2026 Signify Holding. All rights reserved. Signify does not give any representation or warranty as to the accuracy or completeness of the information included herein and shall not be liable for any action in reliance thereon. The information presented in this document is not intended as any commercial offer and does not form part of any quotation or contract, unless otherwise agreed by Signify. Philips and the Philips Shield Emblem are registered trademarks of Koninklijke Philips N.V.