WIC 3C26 P

12NC: 859991009450

GTIN (EAN) code: 8003437204715

Whirlpool
SENSING THE DIFFERENCE



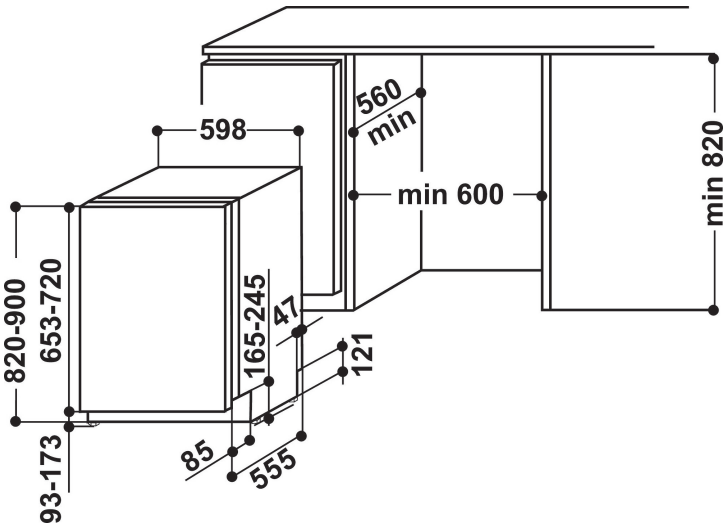

- Installation Type: Built-in
- Energy class A++
- 14 place settings
- 6TH Sense Technology
- Noise level: 46 dB(A)
- 9.5 L per cycle (2660 L per year)
- PowerCleanPro
- PowerCleanPRO
- Autoclean filter
- Start delay 1-12 h
- Silent
- FlexiSpace
- Adjustable upper rack
- Multizone
- Cutlery basket
- Tablet
- Intensive 65ºC

Whirlpool integrated dishwasher: silver color, full size - WIC 3C26 P

This Whirlpool integrated Dishwasher features: silver color. Outstanding A++ energy rating, for reduced energy consumption. Adjustable feet, for perfect stability on uneven floors and surfaces. Superb cleaning performance, for ideal washing results. Outstanding drying performance, providing excellent results.

Powerclean Pro
Powerful water jets on the rear of the machine work to deliver supreme cleaning results on the toughest soil. The intelligent sensors detect the level of dirt and adapt the water pressure accordingly.

Single rack washing option
Outstanding water efficiency. The single rack option allows you to wash a small number of dishes without having to wait to fill your Dishwasher. Enjoy perfect results and low water consumption.

NaturalDry
The automatic door opening at the end of the program ensures better and more natural drying. This system guarantees higher energy efficiency and better drying results.

14 Place Settings
All the space you need. This Whirlpool Dishwasher provides 14 versatile place settings, so you can enjoy all the space you need, always.

Silent
Silent performance. Your Whirlpool Dishwasher is designed to provide ideal washing results, while ensuring the lowest possible noise output.

6th Sense
No prewash required. technology provides perfect washing results with no pre-washing, soaking or scrubbing by hand, while effectively reducing water consumption and costs.

A++ energy efficiency
High energy efficiency. With its A++ Energy Rating, this Whirlpool Dishwasher provides ideal results, while saving energy and resources.

Start Delay
Tailored for you. The Start Delay option allows you to set the Dishwasher to begin its cycle whenever most convenient for you, saving you both time and energy.

Flexible washing options
Ideal space management. Add, remove or adapt the space inside your Dishwasher as you like, thanks to the modular racks and foldable tines.

WIC 3C26 P

12NC: 859991009450

GTIN (EAN) code: 8003437204715

Whirlpool
SENSING THE DIFFERENCE

MAIN FEATURES

Construction type	Built-in
Installation type	Full-integrated
Type of control	Electronic
Type of control settings	-
Removable work top	N/A
Door decor panel	N/A
Main colour of product	Silver
Electrical connection rating (W)	1900
Current (A)	10
Voltage (V)	220-240
Frequency (Hz)	50
Length of Electrical Supply Cord (cm)	130
Plug type	Schuko
Length inlet hose (cm)	155
Length outlet hose (cm)	150
Adjustable plinth	No
Height of removable worktop (mm)	0
Adjustable feet	Yes - all from front
Height of the product	820
Width of the product	598
Depth of the product	555
Depth with open door 90 degree (mm)	-
Minimum niche height	820
Maximum niche height	900
Minimum niche width	600
Maximum niche width	600
Niche depth	560
Net weight (kg)	35.5
Gross weight (kg)	37.5

TECHNICAL FEATURES

Automatic programmes	Yes
Maximum temperature for water intake (°C)	60
Start delay options	Continuous
Start delay time max. (h)	12
Progress indicator	-
Digital countdown indicator	Yes
Salt light indicator	Yes
Rinse aid light indicator	Yes
Safety device	N/A
Adjustable upper basket	Yes
Largest loadable dish upper basket (cm)	0
Largest loadable dish lower basket (cm)	0
Number of place settings	14

PERFORMANCES

Energy efficiency class - NEW (2010/30/EU)	A++
Energy consumption annual (kWh/annum) - NEW (2010/30/EU)	266
Duration of the left-on mode - NEW (2010/30/EU)	12
Power consumption in left-on mode - NEW (2010/30/EU)	6
Power consumption in off-mode - NEW (2010/30/EU)	0.5
Water consumption annual (l/annum) - NEW (2010/30/EU)	2660
Noise level (dB(A) re 1 pW)	46

