Wireless AV Wall System

For Wall-Mounted Flat Panel Display, Ceiling-Mounted Projector, or Wall-Mounted Short Throw Projector

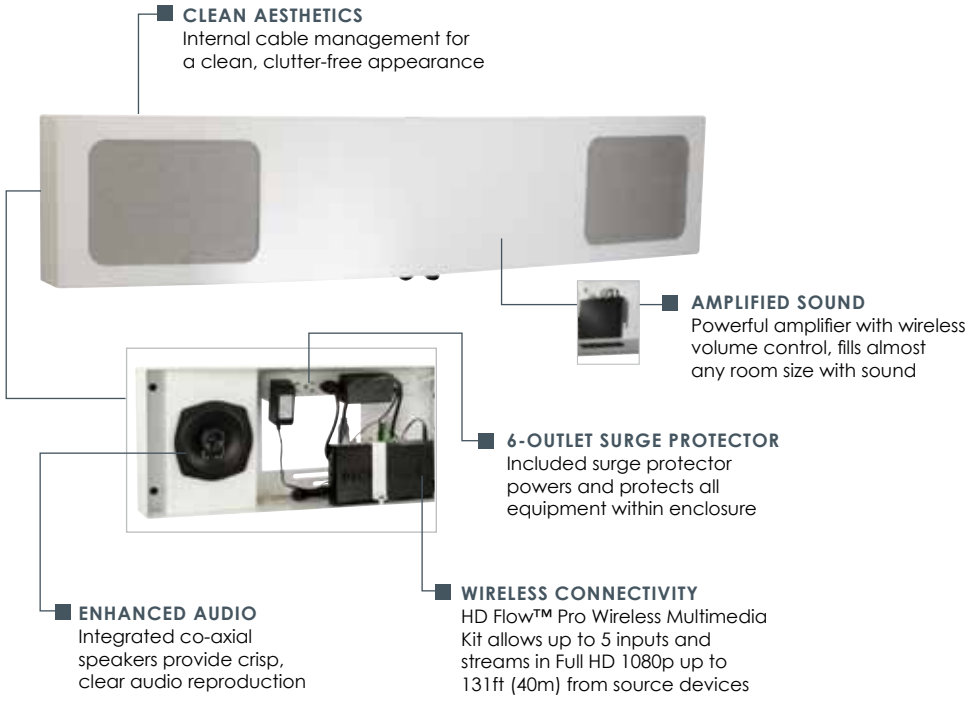


Also available in black


HD Flow™ Pro Wireless Multimedia Kit Included


Dedicated 9" x 9" x 2" (229 x 229 x 51mm) compartment and security bracket provided to secure optional wireless microphone receiver

This Wireless AV Wall System delivers audio and Full HD 1080p video wirelessly to any wall-mounted flat panel display, ceiling-mounted projector, or traditional wall-mounted short throw projector installation. Providing convenience of wireless connectivity, along with amplified stereo sound, makes this a perfect add-on system for any classroom, meeting room or training experience. The built-in HD Flow™ Pro Wireless Multimedia Kit streams video content in Full HD 1080p to the display device via a single AV cable. Up to five audio-visual input devices can be connected such as a PC, laptop, DVD or Blu-ray player, and MP3 player, with source switching at the press of a button. Rich audio reproduction enhances the display, powered a class-D amplifier with wireless volume control and the ability to mix AV content with a microphone signal. This state-of-the-art Wireless AV Wall System offers quick and easy installation and plug-and-play wireless setup. Gone is the need to send AV signals via cables through walls and ceilings. Simply stream it.



Features

- 5-1/4" woofers with 1" post tweeters offer ideal frequency response for AV content as well as spoken voice
- 25W x 2 class-D amplifier features AV and microphone inputs with gain adjustment, treble/base balance adjustments, stereo/mono bridging, and wireless remote control
- HD Flow™ Pro Wireless Multimedia Kit allows up to 5 input devices, and streams in Full HD 1080p up to 131ft (40m) from source devices
- Wireless remote controls for Receiver and Amplifier are included for cable-free convenience
- Fully enclosed equipment management system conceals and protects electronic components, offering a clean, clutter-free appearance
- Removable cover includes security hardware, steel skeleton, acrylic skin, and easy-clean speaker grills
- All electronics are protected by security brackets to safeguard from theft
- Up to 3" left or right horizontal adjustment after installation for perfect projector image positioning
- High Speed HDMI cable with Ethernet [6.6' (2m)] is included to connect Receiver to digital display; 3.5mm stereo cable also included to connect Receiver to Amplifier
- Surge protector to power and protect all equipment within enclosure is included

peerSound™ Audio Solutions

WL-AU-AVWS(-W) Wireless AV Wall System for Wall-Mounted Flat Panel Display, Ceiling-Mounted Projector, or Wall-Mounted Short Throw Projector

Product Specifications

Part Number	WL-AU-AVWS WL-AU-AVWS-W
Product Weight	28.50lb (12.93kg)
Dimensions (W x H x D)	47.21" x 9.75" x 5.58" (1199 x 248 x 142mm)
Color	WL-AU-AVWS - Black WL-AU-AVWS-W - White
Mounting Surfaces	Wood stud, metal stud, concrete and other structures (Other structures require accessory)

Amplifier Specifications

Power rating	25W x 2 RMS class-D amplifier
Inputs	3.5mm Auxiliary jack, 3.5mm microphone jack
Outputs	Bridgeable stereo speaker jacks
Volume Control	Wireless IR remote control with 3-foot IR extender Onboard volume control
Audio controls	Base, treble, balance adjustments Input gain adjustment Stereo / bridge mono switch
Power source	Voltage: 120V AC, 60Hz; Consumption: 24V DC, 2A

Speaker Specifications

Speaker	5-1/4" 2-way speakers with 35W maximum power handling 1" post tweeters 60Hz to 20kHz frequency response 86 dB sensitivity

HD Flow™ Pro Wireless Multimedia Kit Specifications

Wireless Range	131ft (40m)
Video Input (Transmitter)	2 x HDMI up to 1080p (60Hz), 1920x1080 1 x Composite 1 x YPbPr Component
Video Output (Receiver)	1 x HDMI up to 1080p (60Hz), 1920x1080 1 x Composite 1 x YPbPr Component
Audio	2 Ch. Linear PCM, Analog, 48kHz 16-bit ADC
Audio Input	1 x 3.5mm Audio Jack (Transmitter)
Audio Output	1 x 3.5mm Audio Jack (Receiver)
WiFi Frequency	5.15-5.25GHz
Latency	< 30ms Latency
Power	Voltage: 120V AC, 60Hz; Consumption: 12V DC, 2A

Package Specifications

	PACKAGE UPC CODE	PACKAGE CONTENTS	UNITS IN PACKAGE
WL-AU-AVWS **WL-AU-AVWS-W**	735029292395 735029292401	· Wall enclosure with integrated speakers · Wall enclosure cover · HD Flow™ Pro Wireless Multimedia Kit · Amplifier · 3 x Security brackets for electronics · HDMI Cable 6.6' (2m) · 3.5mm audio cable · 6-plug surge protector · Assembly and installation hardware · Assembly and installation instructions · Installation template	1

Accessories

HDS-ASE: Security Enclosure for HD Flow Pro™ Wireless Transmitter
HDS200-R: HD Flow Pro™ Wireless Multimedia Receiver

DE-HD0075B: Peerless-AV Delta 2.5ft (.75m) Premium High Speed HDMI Cable with Ethernet
DE-HD01B: Peerless-AV Delta 3.3ft (1m) Premium High Speed HDMI Cable with Ethernet
DE-HD02: Peerless-AV Delta 6.6ft (2m) Premium High Speed HDMI Cable with Ethernet
DE-HD03: Peerless-AV Delta 9.8ft (3m) Premium High Speed HDMI Cable with Ethernet

Additional AV cable selection available, visit peerless-av.com

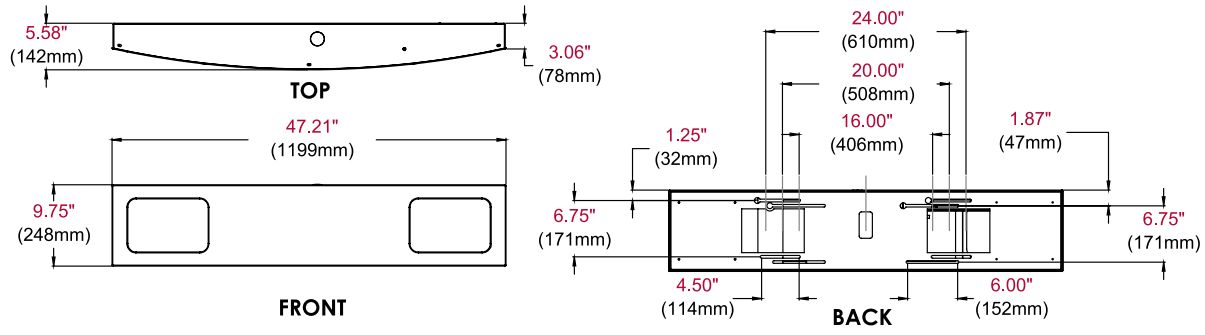

ARCHITECTS SPECIFICATIONS

The Wireless AV Wall System shall be a Peerless-AV model WL-AU-AVWS(-W) and shall be located where indicated on the plans. Assembly and installation shall be done according to instructions provided by the manufacturer.

Peerless-AV ■ 2300 White Oak Circle ■ Aurora, IL 60502 ■ (800) 865-2112 ■ (630) 375-5100 ■ Fax: (800) 359-6500 ■ peersound.peerless-av.com

Visit peerless-av.com to see the complete line of AV solutions from Peerless-AV, including wireless devices, interactive devices, flat panel mounts, projector mounts, carts/stands, furniture, cables, screen cleaners and a full assortment of accessories.

© 2012 Peerless Industries, Inc. All rights reserved. Peerless-AV® is a registered trademark and PeerSound™ is trademark of Peerless Industries, Inc. HD Flow is a trademark of I Do It, LTD. Other parties' marks are the property of their respective owners.