Operating and installation instructions

Combined fridge-freezer with BioFresh compartment

EN



200916 **7085612 - 01**

CBNes ... 7

LIEBHERR

Contents

1	**Appliance at a glance**	**2**
1.1	Description of appliance and equipment	2
1.2	Appliance range of use	2
1.3	Conformity	3
1.4	External dimensions of the appliance	3
1.5	Saving energy	3
1.6	HomeDialog	4
2	**General safety information**	**4**
3	**Controls and displays**	**5**
3.1	Menu structure	5
3.2	Operating the display	6
3.3	Temperature display	6
4	**Putting into operation**	**6**
4.1	Transporting the appliance	6
4.2	Installing the appliance	6
4.3	Changing over the door hinges	7
4.4	Water connection	12
4.5	Insertion into a row of kitchen units	12
4.6	Disposing of packaging	13
4.7	Connecting the appliance	13
4.8	Switching on the appliance	13
5	**Control**	**14**
5.1	Setting the language of the display	14
5.2	Brightness of the temperature display	14
5.3	Contrast of the temperature display	14
5.4	Storage time readout	14
5.5	Child proofing	14
5.6	Door alarm	15
5.7	Temperature alarm	15
5.8	Refrigerator compartment	15
5.9	BioFresh compartment	17
5.10	Freezer compartment	19
6	**Maintenance**	**21**
6.1	Defrosting with NoFrost	21
6.2	Cleaning the appliance	21
6.3	Cleaning the IceMaker	22
6.4	Changing the interior light with bulb	22
6.5	Customer service	22
7	**Malfunctions**	**22**
8	**Decommissioning**	**24**
8.1	Switching off the appliance	24
8.2	Taking the appliance out of service	24
9	**Disposing of the appliance**	**24**

The manufacturer works constantly on the further development of all the types and models. Therefore please understand that we have to reserve the right to make design, equipment and technical modifications.

To get to know all the benefits of your new appliance, please read the information contained in these instructions carefully.

The instructions apply to several models. Differences may occur. Text relating only to specific appliances is marked with an asterisk (*).

Instructions for action are marked with a ▶, the results of action are marked with a ▷.

1 Appliance at a glance

1.1 Description of appliance and equipment

Note

▶ Place food inside the appliance as shown in the diagram. This allows the appliance to save energy during operation.

▶ Shelves, drawers and baskets are arranged for optimum energy efficiency on delivery.

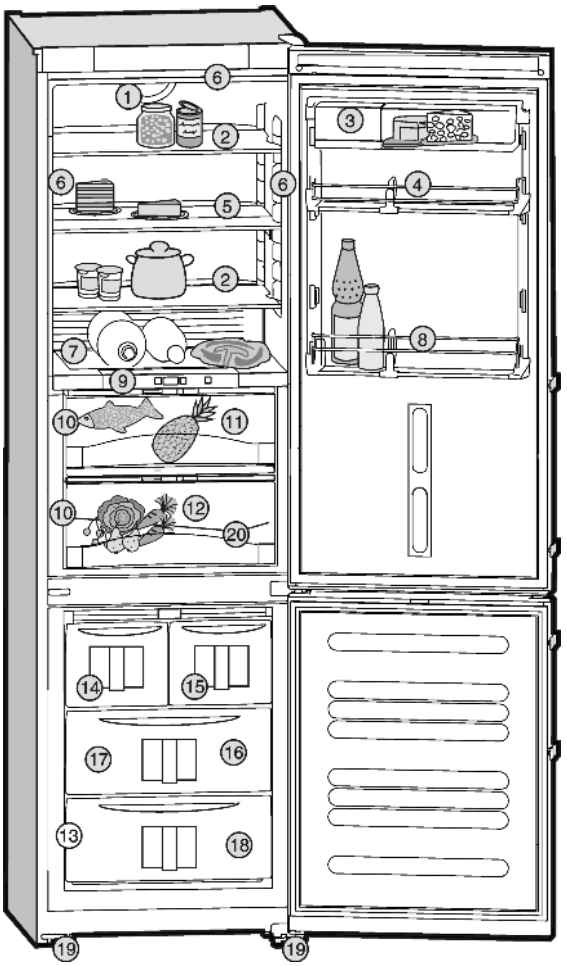

Fig. 1

(1) Fan
(2) Glass shelf, relocatable
(3) Box shelves, removable
(4) Rack for tinned food, relocatable
(5) Sectioned glass shelf, relocatable
(6) Interior light*
(7) Separating plate with bottle shelf
(8) Bottle rack, relocatable
(9) Control panel for BioFresh Plus*
(10) BioFresh lighting*
(11) BioFresh, HydroSafe/ DrySafe, BioFreshPlus*
(12) BioFresh, HydroSafe/ DrySafe
(13) Type plate
(14) IceMaker
(15) Freezer compartment, small
(16) VarioSpace
(17) Cold storage accumulators
(18) Freezer compartment, large
(19) Adjustable feet
(20) Drain hole defrost water

1.2 Appliance range of use

Intended use

The appliance is only suitable for refrigerating food in a domestic or domestic-like environment. This includes, for example, using

- in staff kitchens, bed and breakfast establishments,
- by guests in country houses, hotels, motels and other accommodation,
- for catering and similar services in the wholesale trade.

All other types of use are not permitted.

Foreseeable misuse

The following applications are expressly forbidden:

- Storing and refrigerating medicines, blood plasma, laboratory preparations or similar substances and products based on the Medical Device Directive 2007/47/EC
- Use in areas at risk of explosions

Misusing the appliance may lead to damage to the goods stored or they may spoil.

Climate classifications

Depending on the climate classification the appliance is designed to operate in restricted ambient temperatures. The climate classification applying to your appliance is printed on the rating plate.

Note

▶ Keep to the specified ambient temperatures in order to guarantee that the appliance works properly.

Climate classification	for ambient temperatures of
SN	10 °C to 32 °C
N	16 °C to 32 °C
ST	16 °C to 38 °C
T	16 °C to 43 °C

1.3 Conformity

The refrigerant circuit has been tested for leaks. This appliance complies with the applicable safety stipulations and with directives 2014/35/EU, 2014/30/EU, 2009/125/EG, 2011/65/EU and 2010/30/EU.

The BioFresh compartment satisfies the requirements for a cold storage compartment in acc. with DIN EN 62552.

1.4 External dimensions of the appliance

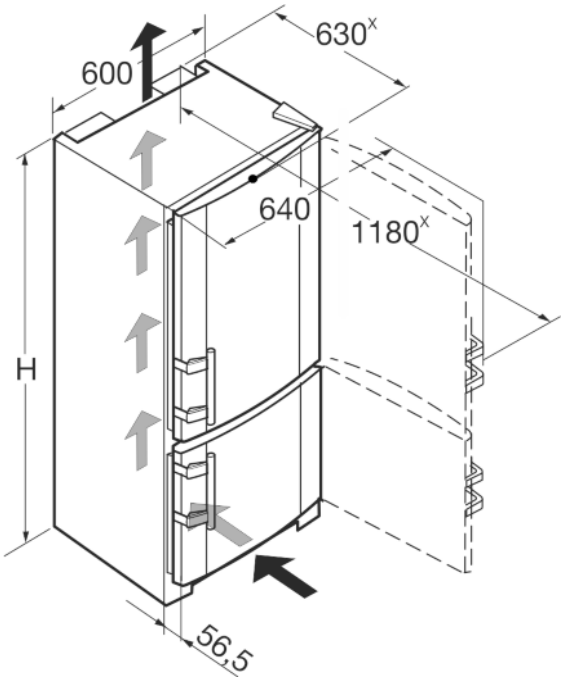

Fig. 2

Model	Height of appliance H (mm)
CBNes	2011

x For appliances supplied with wall spacers, the measurement increases by 35 mm (see 4.2) .

1.5 Saving energy

- Pay attention to good ventilation. Do not cover ventilation holes or grids.
- Always keep the fan air slits clear.
- Do not install the appliance in direct sunlight, next to an oven, radiator or similar.
- Energy consumption is dependent on the installation conditions, e.g. ambient temperature (see 1.2) . If the ambient temperature deviates from the standard temperature of 25°C, the energy consumption may differ.
- Open the appliance for as short a time as possible.
- The lower the temperature is set the higher the energy consumption.
- Sort food before arranging (see Appliance at a glance).
- Store all food well packaged and covered. A build up of frost is avoided.
- Only take food out for as long as necessary so that it doesn't warm up too much.
- Inserting hot food: let it cool to room temperature first.
- Thaw frozen food in the refrigerator.
- If you intend to be on holiday for a long time use the holiday function (see 5.8.4) .

Dust deposits increase energy consumption:

- For refrigerators with heat exchangers dust the metal grid on the back of the appliance once a year.

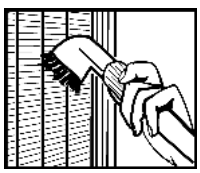

1.6 HomeDialog

Depending on model and options, the HomeDialog system can be used to network a number of Liebherr appliances (situated, for example, in the basement) with a main appliance (sited, for example, in the kitchen) and control them via the latter. You will find more information on the benefits, requirements and principle of operation on the internet at www. liebherr.com.

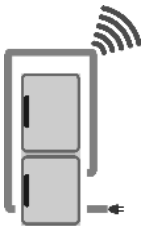

2 General safety information

Danger for the user:

- This appliance can be used by children from the age of 8 onwards. It can also be used by people with impaired physical, sensory or mental abilities or with a lack of experience and knowledge provided that they are supervised or have received instruction in the safe use of this appliance, and about the attendant hazards. Children must not play with this appliance. Cleaning and user maintenance work must not be carried out by children without adult supervision. Children aged between 3 and 8 are allowed to load and unload the appliance. Children below the age of 3 must be kept away from the appliance unless they are under continuous adult supervision.
- When disconnecting the appliance from the supply, always take hold of the plug. Do not pull the cable.
- In the event of a fault pull out the mains plug or deactivate the fuse.
- Do not damage the mains power cable. Do not operate the appliance with a defective mains power cable.
- Have any repairs to or intervention in the appliance, and any change of the mains power cable, carried out by the customer service only or by other specialised personnel trained for the purpose.
- Only assemble, connect and dispose of the appliance according to the instructions.
- Please keep these instructions in a safe place and pass them on to any subsequent owners.
- All repairs to and intervention in the IceMaker may be carried out only by service personnel or by other skilled personnel trained for the purpose.
- The manufacturer is not liable for damage caused by a faulty fixed water connection.
- Special-purpose lamps (incandescent lamps, LEDs, fluorescent tubes) in the appliance serve to illuminate the appliance interior and are not suited for room illumination.

Fire hazard:

- The refrigerant R 600a is environmentally friendly but flammable. Escaping refrigerant may ignite.
  - Do not damage the refrigerant circuit pipes.
  - Do not allow naked flames or ignition sources to enter the appliance.
  - Do not use any electrical appliances in the interior (e.g. steam cleaners, heaters, ice cream maker etc.).
  - If refrigerant escapes: remove any naked flames or sources of ignition from the leakage area. Ventilate the room well. Notify the after-sales service.
- Do not store explosives or sprays using combustible propellants such as butane, propane, pentane, etc. in the appliance. To identify these spray cans, look for the list of contents printed on the can, or a flame symbol. Gases possibly escaping may ignite due to electrical components.
- Keep burning candles, lamps and other items with naked flames away from the appliance so that they do not set the appliance on fire.
- Please be sure to store alcoholic drinks or other packaging containing alcohol in tightly closed containers. Any alcohol that leaks out may be ignited by electrical components.

Danger of tipping and falling:

- Do not misuse the plinth, drawers, doors etc. as a step or for support. This applies particularly to children.

Danger of food poisoning:

- Do not consume food which has been stored too long.

Danger of frostbite, numbness and pain:

- Avoid lasting skin contact with cold surfaces or refrigerated/frozen food or take protective steps, e.g. wear gloves. Do not consume ice cream, water ice or ice cubes immediately and do not consume them too cold.

Danger of injury and damage:

- Hot steam can lead to injury. Do not use electrical heating or steam cleaning equipment, open flames or defrosting sprays to defrost.
- Do not use sharp implements to remove the ice.

Danger of crushing:

- Do not hold the hinge when opening and closing the door. Fingers may get caught.

Symbols on the appliance:

	The symbol can be located on the compressor. It refers to the oil in the compressor and indicates the following danger: Swallowing or inhaling can be fatal. This is only relevant for recycling. There is no danger in normal operation.

Please observe the specific information in the other sections:

	DANGER	identifies a situation involving direct danger which, if not obviated, may result in death or severe bodily injury.
	WARNING	identifies a dangerous situation which, if not obviated, may result in death or severe bodily injury.
	CAUTION	identifies a dangerous situation which, if not obviated, may result in minor or medium bodily injury.
	NOTICE	identifies a dangerous situation which, if not obviated, may result in damage to property.

	Note	identifies useful information and tips.

EN

3 Controls and displays

3.1 Menu structure

MAIN MENU	REFRIGERATING	TEMPERATURE		
		BIOFRESHPLUS*		
		SUPERCOOL	ON / OFF	
			INFO	
		HOLIDAY	ON / OFF	
			INFO	
		ON / OFF	ON / OFF	
			INFO	
	FREEZING	TEMPERATUR		
		SUPERFROST	ON / OFF	
			INFO	
		ICEMAKER	TWISTCLEAN	START
				INFO
			WATER SUPPLY	
			ON / OFF	
			INFO	
		ON / OFF	ON / OFF	
			INFO	
	STORAGE TIMES	Product Groups	Product	STORAGE TIMES
	ADDITIONAL FUNC-TIONS	CHILD PROOFING	ON / OFF	
			INFO	
		BIOFRESH	SETTING	
			INFO	
		BIOFRESHPLUS*	SETTING	
			INFO	
		NET@HOME* / HOME-DIALOG SYSTEM*	Separate instructions	
		TEMPERATURE	SETTING	Lighting setting
				INFO
			CONTRAST	CONTRAST
				INFO
			LANGUAGE	Language selection

3.2 Operating the display

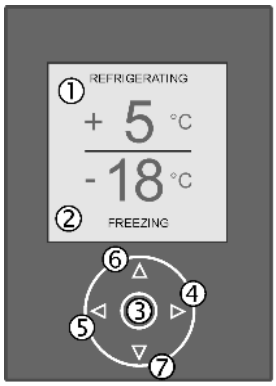

Fig. 3

(1) Refrigerator compartment temperature display
(2) Freezer compartment temperature display
(3) OK button
(4) Right button
(5) Left button
(6) Up button
(7) Down button

You can operate all the functions of the appliance via the display:

- **To activate the main menu:** Press any button.
- **To move the cursor up:** Press Up button *Fig. 3 (6)*.
- **To move the cursor down:** Press Down button *Fig. 3 (7)*.
- **To move the cursor to the left:** Press left button *Fig. 3 (5)*.
- **To move the cursor to the right:** Press right button *Fig. 3 (4)*.
- Lengthy info text is on several pages in the display:
  - **To page forwards:** Press right button *Fig. 3 (4)*.
  - **To page back:** Press left button *Fig. 3 (5)*.
- **To confirm selection:** Press OK button *Fig. 3 (3)*.
- **To quit menu:** Press left button *Fig. 3 (5)*.

3.3 Temperature display

During normal operation, the display shows:

- the highest freezing temperature
- below the freezing temperature: the preset temperature in the freezer cabinet
- the average cooling temperature
- above the cooling temperature: the preset temperature in the chiller compartment

The freezer temperature display flashes if/when:

- You change the temperature setting
- The appliance is not cold enough after switching on
- The temperature rises by several degrees

Stripes flash in the display if/when:

- The freezer temperature exceeds 0 °C.

The following displays indicate a fault. Possible causes and solutions: (see Malfunction).

- F0 to F9
- FE
- POWER FAILURE
- CHECK WATER SUPPLY

4 Putting into operation

4.1 Transporting the appliance

CAUTION
Risk of injury and danger of damage as a result of incorrect transport!
▶ Transport the appliance in a packed condition.
▶ Transport the appliance upright.
▶ Do not transport the appliance without assistance.

4.2 Installing the appliance*

WARNING
Fire hazard due to dampness!
If live parts or the mains lead become damp this may cause short circuits.
▶ The appliance is designed for use in enclosed areas. Do not operate the appliance outdoors or in areas where it is exposed to splash water or damp conditions.

WARNING
Risk of fire due to short circuit!
If the mains cable/connector of the appliance or of another appliance touch the rear of the appliance, the mains cable/connector may be damaged by the appliance vibrations, leading to a short circuit.
▶ Stand the appliance so that it is not touched by connectors or main cables.
▶ Do not plug the appliance or any others into sockets located near the rear of the appliance.

WARNING
Fire hazard due to refrigerant!
The refrigerant R 600a is environmentally friendly but flammable. Escaping refrigerant may ignite.
▶ Do not damage the piping of the refrigeration circuit.

WARNING
Fire hazard and danger of damage!
▶ Do not place appliances emitting heat e.g. microwaves, toasters etc. on the appliance!

WARNING
Blocked ventilation openings pose a risk of fire and damage!
▶ Always keep the ventilation openings clear. Always ensure that the appliance is properly ventilated!

NOTICE
Risk of damage due to condensate!
▶ Do not install the appliance directly alongside a further refrigerator/freezer.

❑ In the event that the appliance is damaged, contact the supplier immediately before connecting to the mains.
❑ The floor at the site must be flat and level.
❑ Do not install the appliance in a location where it is exposed to direct radiation of the sun, next to a cooker, heater and similar.

* Depending on model and options

- ❑ Always stand the appliance backed directly to the wall using the enclosed wall spacers (see below).
- ❑ The appliance may be moved only when it is empty.
- ❑ The surface supporting the appliance must be at the same level as the surrounding floor.
- ❑ Do not install the appliance without assistance.
- ❑ The more R 600a refrigerant there is in the appliance, the larger the room in which the appliance is standing needs to be. In rooms that are too small, a flammable mix of gas and air may be created if there is a leak. According to the EN 378 standard, every 11 g of R 600a refrigerant requires at least 1 m^3 space in the room for the appliance. The amount of refrigerant in your appliance is on the type plate inside the appliance.

▶ Detach the connecting cable from the rear of the appliance, removing the cable holder at the same time because otherwise there will be vibratory noise!
▶ Remove the protective film from the outside of the appliance.

NOTICE
The stainless steel doors are provided with a high-quality surface coating and must not be treated using the accompanying care product.

Otherwise the surface coating will be affected.

▶ Wipe the coated **door surfaces** using a soft, clean cloth only.
▶ Apply a stainless steel cleaner only to the **stainless steel side walls** evenly, wiping with the grain. Subsequent cleaning becomes easier as a result.
▶ Wipe **side walls with a paint finish** using a soft, clean cloth only.

▶ Remove the protective film from the decorative trims and drawer fronts.
▶ Remove all transit supports.

The spacers supplied with some appliances must be used to achieve the stated energy consumption. These will extend the depth of the appliance by approx. 35 mm. The appliance is fully functional if the spacers are not used, but does have a slightly higher energy consumption.

▶ In the case of an appliance with enclosed wall spacers, mount the wall spacers on the back of the appliance at the top left and right.

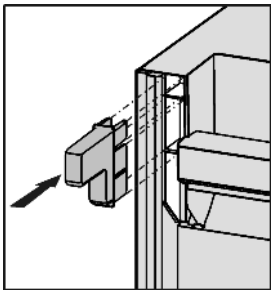

▶ Dispose of packaging material (see 4.6) .
▶ Align the appliance so that it stands firmly and on a level by applying the accompanying spanner to the adjustable-height feet (A) and using a spirit level.
▶ Then support the door: Extend the adjustable foot at the turn hinge (B) until it rests on the floor and then make a further 90° turn.

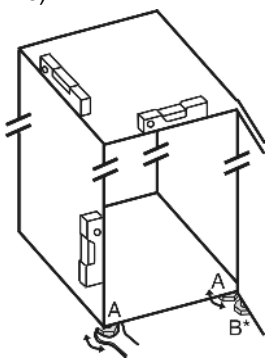

Note
▶ Clean the appliance (see 6.2) .

If the appliance is installed in a very damp environment, condensate may form on the outside of the appliance.
▶ Always see to good ventilation at the installation site.

4.3 Changing over the door hinges

You can change over the door hinges if necessary.

Ensure that the following tools are to hand:

- ❑ Torx® 25
- ❑ Torx® 15
- ❑ Screwdriver
- ❑ Cordless screwdriver, if necessary
- ❑ Second person for fitting work, if needed

4.3.1 Detaching the upper soft stop mechanism*

For appliances **with soft stop mechanism** start with this item.
For appliances **without soft stop mechanism** start with item (see 4.3.2) .

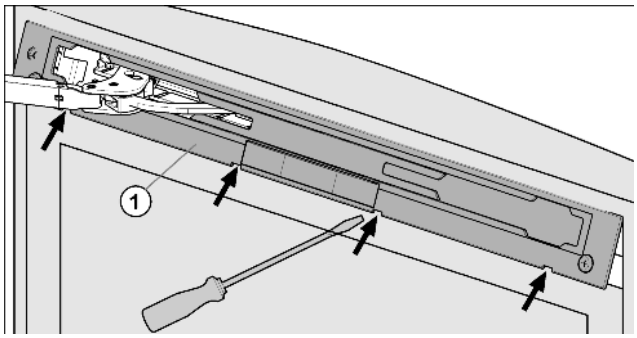

Fig. 4

▶ Open the upper door.

NOTICE
Risk of damage!
If the door seal is damaged, the door may fail to close properly and the cooling will be inadequate.
▶ Do not damage the door seal with the screwdriver!

▶ Disengage and remove the faceplate *Fig. 4 (1)* using a flat-blade screwdriver.
▷ The faceplate is attached over the soft stop bracket.

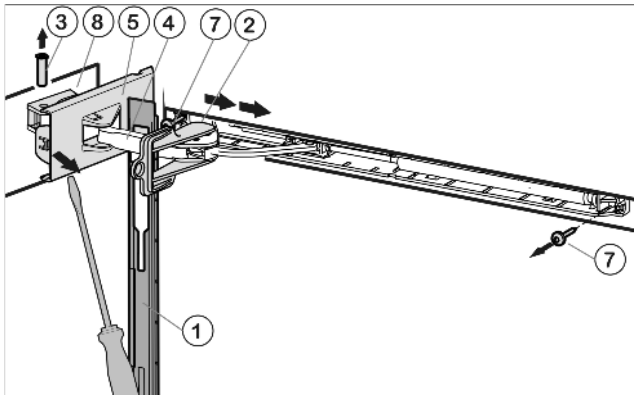

Fig. 5

▶ Push the faceplate over the soft stop bracket *Fig. 5 (4)* in the direction of the appliance.
▶ Snap the safety lock *Fig. 5 (2)* into the oblong hole.
▷ The safety lock prevents the hinge from snap-closing.
▶ Using a screwdriver, disengage the cover on the hinge side *Fig. 5 (5)* as far as the first detent.
▷ The pin becomes visible.
▶ Press the pin *Fig. 5 (3)* out from underneath.
▶ Press the soft stop bracket *Fig. 5 (4)* towards the door.

- ▶ Fully detach the cover on the hinge side *Fig. 5 (5)* and remove it.
- ▶ Remove the faceplate *Fig. 5 (1)*.
- ▶ Using a screwdriver, disengage the cover *Fig. 6 (6)* on the hinge side and draw it outwards for removal.

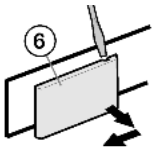

Fig. 6

- ▶ Unscrew the soft stop unit (2x Torx® 15) *Fig. 5 (7)*.
- ▶ Pull the soft stop unit out a little, push it in the direction of the handle side and swing it out.
- ▶ Set the soft stop unit aside.
- ▶ Unscrew the bearing element *Fig. 7 (8)*, turn it 180° and transfer it to the opposite side. Possibly make preliminary holes with a bradawl or use a cordless screwdriver.

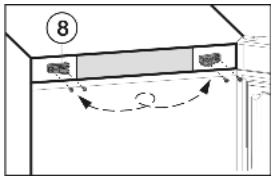

Fig. 7

4.3.2 Releasing the cable connection on the housing

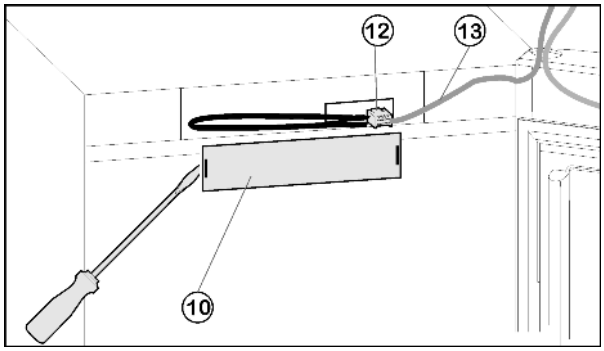

Fig. 8

- ▶ Open the upper door, if necessary.

For appliances without soft stop mechanism:

- ▶ To remove the cover on the handle side *Fig. 9 (6)*: disengage using a screwdriver on the right and slide outwards.
- ▶ To remove the cover on the hinge side *Fig. 9 (11)*: disengage using a screwdriver on the left and slide outwards.

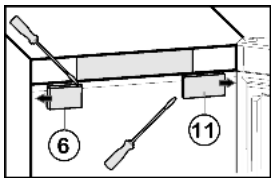

Fig. 9

For all appliances:

- ▶ Remove the front panel *Fig. 8 (10)* using a flat-blade screwdriver.
- ▶ Take out the contact and disconnect the plug connection *Fig. 8 (12)*.
- ▶ Detach grey cable *Fig. 8 (13)* from the guide.

4.3.3 Detaching the upper door

Note

- ▶ Remove any food from the door racks before removing the door, so that no food falls out.

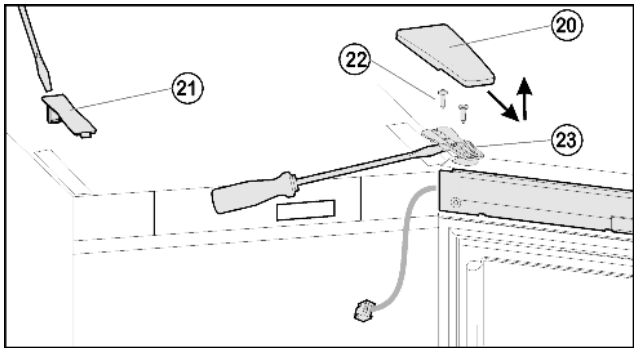

Fig. 10

- ▶ Draw the cover *Fig. 10 (20)* forwards and lift it off.
- ▶ Lift off the cover *Fig. 10 (21)*.

CAUTION

Risk of injury if the door tips!

- ▶ Take good hold of the door.
- ▶ Set down the door carefully.

- ▶ Completely undo the screws *Fig. 10 (22)*.
- ▶ Lift off the door complete with turn hinge *Fig. 10 (23)* and cable. For release, possibly use a flat-blade screwdriver and carefully lever it under the turn hinge.
- ▶ Set the door aside.

4.3.4 Detaching the lower soft stop mechanism*

For appliances **with soft stop mechanism**.

For appliances **without soft stop mechanism** proceed with item (see 4.3.5) .

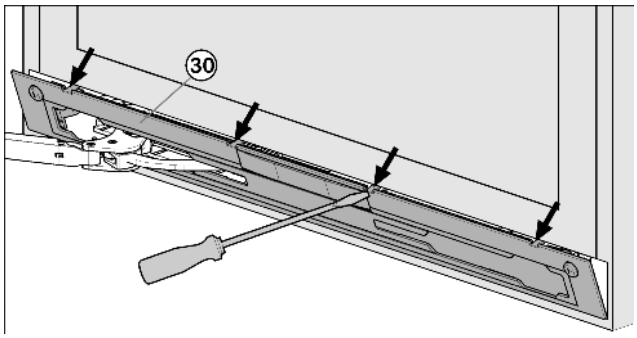

Fig. 11

- ▶ Open the lower door.

NOTICE

Risk of damage!

If the door seal is damaged, the door may fail to close properly and the cooling will be inadequate.

- ▶ Do not damage the door seal with the screwdriver!

- ▶ Disengage and remove the faceplate *Fig. 11 (30)* using a flat-blade screwdriver.
- ▷ The faceplate is attached over the soft stop bracket.

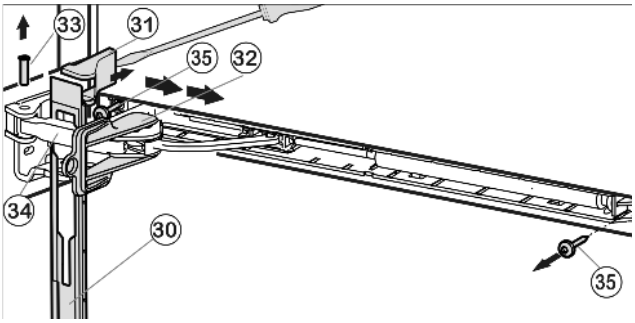

Fig. 12

- ▶ Slide the faceplate forwards over the soft stop bracket *Fig. 12 (34)* in the direction of the appliance.
- ▶ Snap the safety lock *Fig. 12 (32)* into the oblong hole.
- ▷ The safety lock prevents the hinge from snap-closing.
- ▶ Using a screwdriver, lift off the cover *Fig. 12 (31)* from the outside and remove it in an outward direction.
- ▶ If necessary, tip the appliance backwards with the assistance of a second person.
- ▶ Press the pin *Fig. 12 (33)* out from underneath.
- ▶ Press the soft stop bracket *Fig. 12 (34)* towards the door.
- ▶ Remove the faceplate *Fig. 12 (30)*.
- ▶ Unscrew the soft stop unit (2x Torx® 15) *Fig. 12 (35)*.
- ▶ Pull the soft stop unit out a little, push it in the direction of the handle side and swing it out.
- ▶ Set the soft stop unit aside.

4.3.5 Detaching the lower door

- ▶ Close the lower door.

For appliances without soft stop mechanism:

- ▶ Draw the middle bearing pin *Fig. 13 (41)* out of the turn hinge and lower door.

For appliances with soft stop mechanism:

- ▶ Draw the middle bearing pin *Fig. 13 (41)* together with the washer *Fig. 13 (44)* out of the turn hinge and lower door.

For all appliances:

- ▶ Remove the plastic cap *Fig. 13 (40)*.

CAUTION

Risk of injury if the door tips!

- ▶ Take good hold of the door.
- ▶ Set down the door carefully.

- ▶ Open the lower door.
- ▶ Unscrew the middle turn hinge (2x Torx® 25). *Fig. 13 (42)*
- ▶ Lift off the lower door and set it aside.

4.3.6 Transferring the middle bearing elements

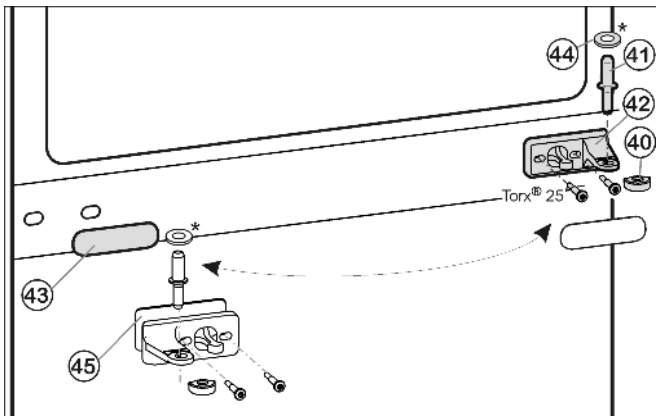

Fig. 13

- ▶ Carefully detach the cover panel *Fig. 13 (43)*.
- ▶ Turn the middle turn hinge *Fig. 13 (42)* with thewasher *Fig. 13 (45)* through 180° and screw it **firmly** into place on the new hinge side **(with 4 Nm)**.
- ▶ Turn the cover panel *Fig. 13 (43)* through 180° and snap it into place again on the new handle side.

EN

4.3.7 Transferring the lower bearing elements*

for appliances without soft stop mechanism

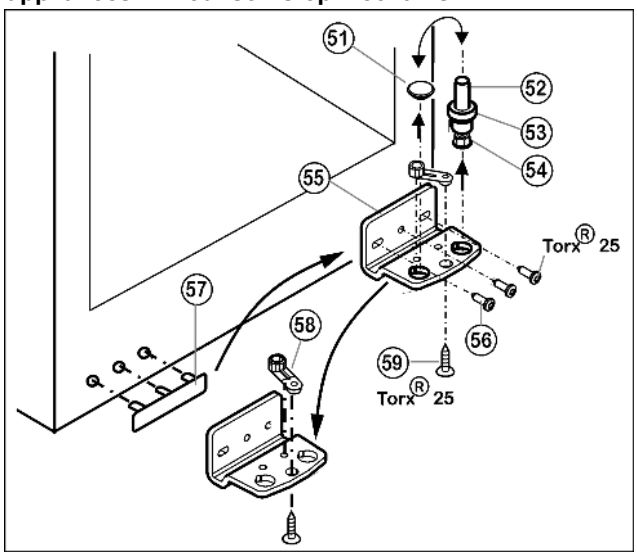

Fig. 14

- ▶ Lift out the bearing pin *Fig. 14 (52)* together with washer *Fig. 14 (53)* and adjustable-height foot *Fig. 14 (54)*.
- ▶ Lift off the stopper *Fig. 14 (51)*.
- ▶ Unscrew *Fig. 14 (56)* the turn hinge *Fig. 14 (55)*.
- ▶ Unscrew *Fig. 14 (59)* the bearing element *Fig. 14 (58)*, transfer it to the opposite location hole of the turn hinge and screw it firmly into place.
- ▶ Carefully lift off the cover on the handle side *Fig. 14 (57)* and transfer it to the opposite side.
- ▶ Screw the turn hinge *Fig. 14 (55)* firmly into place on the new hinge side, possibly using a cordless screwdriver **(with 4 Nm)**.
- ▶ Re-insert the stopper *Fig. 14 (51)* into the other hole.
- ▶ Re-insert the bearing pin *Fig. 14 (52)* together with the washer and adjustable-height foot. In so doing, pay attention that the locating lug points backwards

4.3.8 Transferring the lower bearing elements *

for appliances with soft stop mechanism

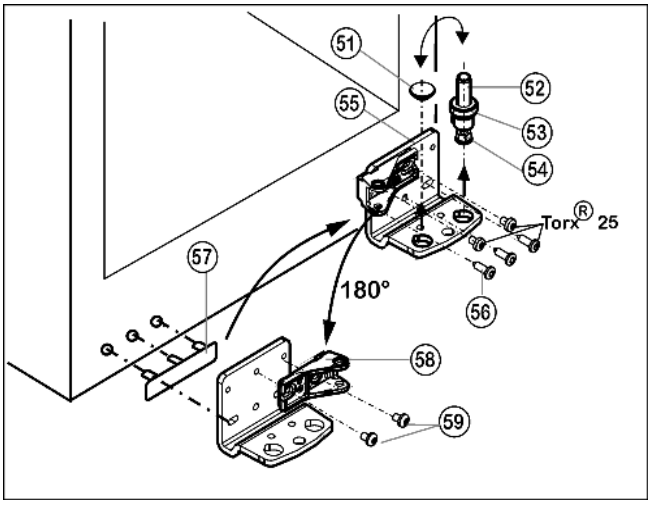

Fig. 15

- ▶ Lift out the bearing pin *Fig. 15 (52)* together with washer *Fig. 15 (45)* and adjustable-height foot *Fig. 15 (54)*.
- ▶ Lift out the stopper *Fig. 15 (51)*.

- ▶ Unscrew *Fig. 15 (56)* the turn hinge *Fig. 15 (55)*.
- ▶ Unscrew the bearing element *Fig. 15 (58)*, turn it through 180° and screw it firmly into place again inside.
- ▶ Carefully lift off the cover on the handle side *Fig. 15 (57)* and transfer it to the opposite side.
- ▶ Screw the bottom turn hinge *Fig. 15 (55)* firmly into place **(with 4 Nm)** on the new hinge side, possibly using a cordless screwdriver.
- ▶ Re-insert the stopper *Fig. 15 (51)* into the other hole.
- ▶ Re-insert the bearing pin *Fig. 15 (52)* together with the washer and adjustable-height foot. In so doing, pay attention that the locating lug points backwards

4.3.9 Transferring the handles

For appliances without soft stop mechanism (on both doors):

- ▶ Transfer the spring clamp *Fig. 16 (71)*: Depress the latch nose and pull the spring clamp off over it.
- ▶ Slide the spring clamp into place on the new hinge side until it clicks into place.

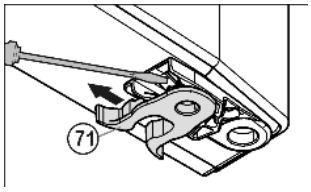

Fig. 16

For all appliances:

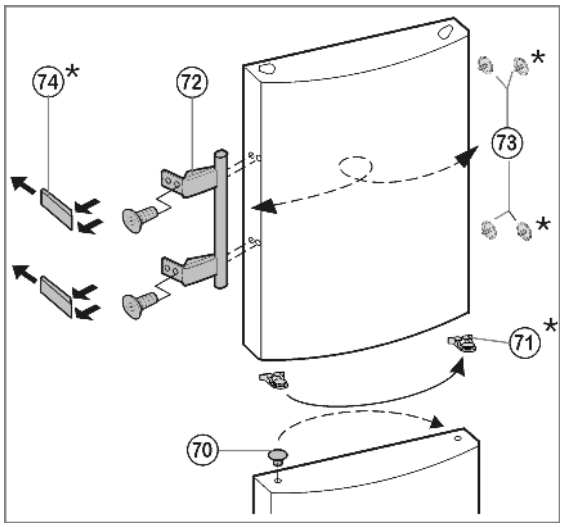

Fig. 17

- ▶ **On the bottom door:** Lift the stopper *Fig. 17 (70)* out of the door bearing bush and transfer it.
- ▶ **On both doors:** Detach door handle *Fig. 17 (72)*, stopper *Fig. 17 (73)* and pressure plates *Fig. 17 (74)* and transfer to the opposite side.
- ▶ When fitting the pressure plates on the opposite side, make sure they snap properly into place.*

4.3.10 Fitting the lower door

- ▶ Place the door from above onto the bearing pin *Fig. 15 (52)*.
- ▶ Close the door.
- ▶ Place the plastic cap *Fig. 13 (40)* back on the middle turn hinge *Fig. 13 (42)*
- ▶ Pass the middle bearing pin *Fig. 13 (41)* through the middle turn hinge *Fig. 13 (42)* into the lower door.

Appliances with soft stop mechanism:

- ▶ Attach the washer *Fig. 13 (44)* to the middle bearing pin *Fig. 13 (41)*.

4.3.11 Fitting the lower soft stop mechanism*

For appliances **with soft stop mechanism**.

For appliances **without soft stop mechanism** proceed with item (see 4.3.12) .

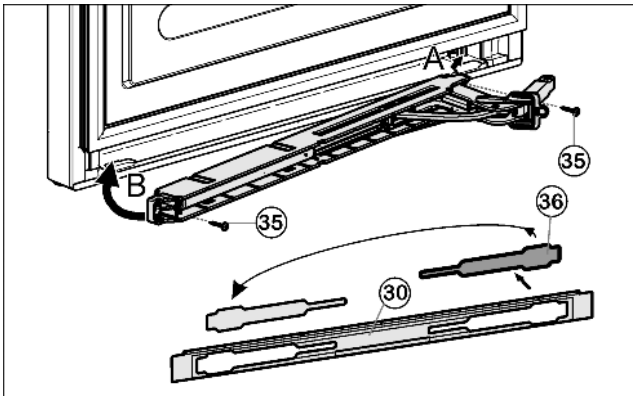

Fig. 18

- ▶ Remove the cover *Fig. 18 (36)* from the faceplate *Fig. 18 (30)* and re-insert it at the other side.
- ▶ Engage the joint of the soft stop unit on the hinge side (A) and swing it into place (B).
- ▷ The screw holes at the left and right have to register.
- ▶ Screw the soft stop unit firmly into place(2x Torx® 15) *Fig. 18 (35)*.

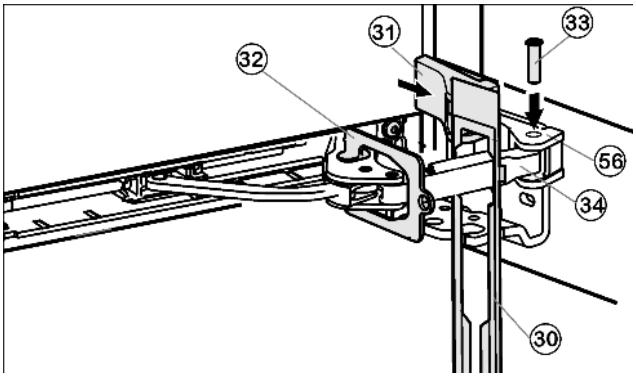

Fig. 19

- ▶ Attach the faceplate *Fig. 19 (30)* to the soft stop bracket so that the catches face forwards and the front faces the appliance.
- ▶ Draw the soft stop bracket *Fig. 19 (34)* to the bearing element *Fig. 19 (56)* and insert the pin *Fig. 19 (33)* from above so that the square is seated in the depression.
- ▶ Attach and engage the cover *Fig. 19 (31)*.
- ▷ Pay attention that the cover fits properly so that the door closes properly and the pin is secured.
- ▶ Twist the safety lock *Fig. 19 (32)* for removal.
- ▶ Snap thefaceplate *Fig. 19 (30)* onto the door.
- ▶ Close the lower door.

4.3.12 Transferring the cable connection (upper door)

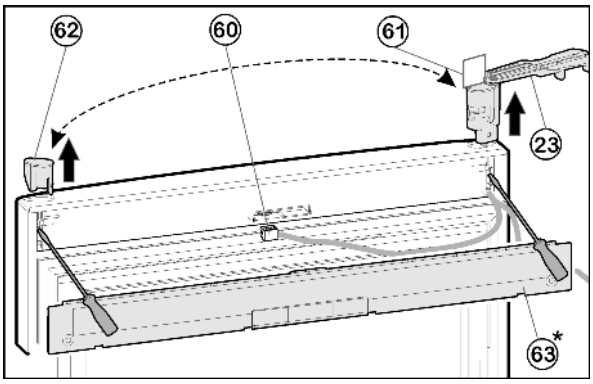

Fig. 20

- ▶ Using a screwdriver, disengage the cover *Fig. 20 (63)* from the door.
- ▶ Detach the connector *Fig. 20 (60)*.

*** Depending on model and options**

▶ On the upper door, rotate the turn hinge *Fig. 20 (23)* outwards, parallel to the edge of the door.

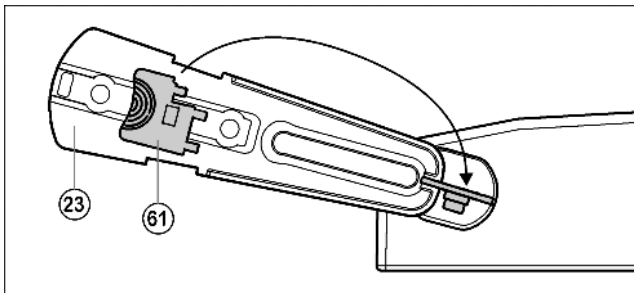

Fig. 21

NOTICE
Cables may be twisted and damaged as a result!
▶ Use the template.

▶ Detach the supplied template *Fig. 21 (61)* from the turn hinge and use it to prevent the turn hinge *Fig. 21 (23)* and bush from turning.
▶ Using a screwdriver, push out the turn hinge *Fig. 20 (23)* from underneath and remove it from the door, complete with cable.

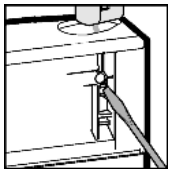

▶ Using a screwdriver, push out the stopper *Fig. 20 (62)* from underneath and transfer it to the opposite side.
▶ Thread in the cable of the turn hinge *Fig. 20 (23)* on the opposite side and insert the turn hinge.
▶ Detach the template *Fig. 20 (61)* and secure it in the turn hinge.
▶ Plug in the connector *Fig. 20 (60)*.
▶ Lay the cable in the guide.

Appliances without soft stop mechanism:
▶ Snap the cover *Fig. 20 (63)* into place on the door.

4.3.13 Fitting the upper door

▶ Place the upper door on the middle bearing pin *Fig. 13 (41)*, close the door and attach the upper turn hinge *Fig. 10 (23)* so that it engages in the upper side of the appliance.
▶ Screw theturn hinge *Fig. 10 (23)***firmly into place (with 4 Nm)**. Possibly make preliminary holes with a bradawl or use a cordless screwdriver.
▶ Snap cover *Fig. 10 (20)* and cover *Fig. 10 (21)* into place.
▶ Plug in the connector *Fig. 8 (12)* again.
▶ Lay the cable in the guide.
▶ Attach the cover *Fig. 8 (10)* again.

Appliances without soft stop mechanism:
▶ Turn the cover *Fig. 9 (6)* through 180°, attach it from the outside to the handle side and snap it into place.
▶ Turn the cover *Fig. 9 (11)* through 180°, attach it from the outside to the handle side and snap it into place.

Appliances with soft stop mechanism:
▶ Leave the door open.

4.3.14 Fitting the upper soft stop mechanism*

For appliances **with soft stop mechanism**.

For appliances **without soft stop mechanism** proceed with item (see 4.3.15) .

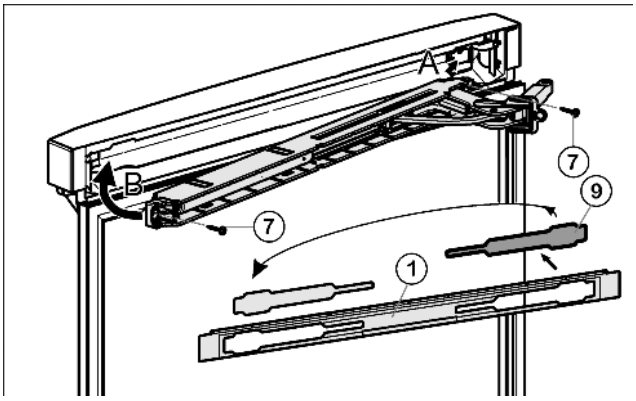

Fig. 22

▶ Remove the cover *Fig. 22 (9)* from the faceplate *Fig. 22 (1)* and re-insert it at the other side.
▶ Engage the upper soft stop unit with the joint on the hinge side (A) and swivel into place (B).
▷ The screw holes at the left and right have to register.
▶ Screw the soft stop unit firmly into place. (2x Torx® 15) *Fig. 22 (7)*

Note
▶ Keep to the correct order. First attach the panel over the soft stop bracket, then the cover.

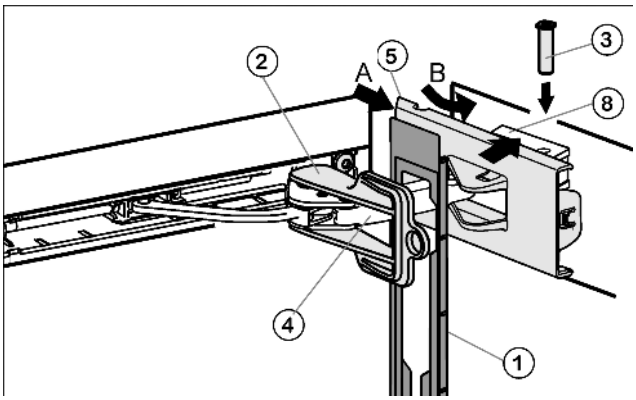

Fig. 23

▶ Attach the faceplate *Fig. 23 (1)* to the soft stop bracket *Fig. 23 (4)* so that the catches face inwards and the front faces the appliance.
▶ Slide on the cover *Fig. 23 (5)* from the outside (A) and swivel it over the bearing element *Fig. 23 (8)* (B).
▶ Attach the cover *Fig. 23 (5)* and engage it as far as the first detent.
▷ The openings for the pin are on top of one another after the soft stop bracket has been positioned.
▶ Draw the soft stop bracket *Fig. 23 (4)* to the bearing element *Fig. 23 (8)* and insert the pin *Fig. 23 (4)* from above so that the square is seated in the depression.
▶ Now completely snap the cover *Fig. 23 (5)* onto the bearing element *Fig. 23 (8)*.
▷ Pay attention that the cover fits properly so that the door closes properly and the pin is secured.
▶ Twist the safety lock *Fig. 23 (2)* for removal.
▶ Snap thefaceplate *Fig. 23 (1)* onto the door.
▶ Turn the cover *Fig. 6 (6)* through 180°, attach and engage it on the handle side.

4.3.15 Aligning the doors

▶ Possibly align the door to the appliance housing by way of the two slots in the lower turn hinge *Fig. 15 (55)* and middle turn hinge *Fig. 13 (42)*. To do so, unscrew the middle screw in the bottom turn hinge *Fig. 15 (55)*.

WARNING
Risk of injury due to the door dropping out!
If the bearing parts are not screwed into place firmly enough, the door may drop out. This may lead to severe injuries. What is more, the door may not close and therefore the appliance may fail to cool properly.
▶ Screw the turn hinges firmly into place with 4 Nm.
▶ Check all of the screws and retighten if necessary.

4.4 Water connection

WARNING
Danger of electric shock!
▶ Disconnect the appliance by unplugging it before you connect it to the water line.
▶ Shut off the water supply before you connect the water feed lines of the IceMaker.
▶ The connection to the drinking water system may be carried out only by a qualified gas fitter and plumber.

WARNING
Risk of poisoning!
▶ The water quality has to comply with the drinking water ordinance of the respective country (e.g. 98/8
▶ Connect to the drinking water supply only.
▶ The IceMaker serves exclusively for making ice cubes in household quantities and has to be operated with water suitable for the purpose.

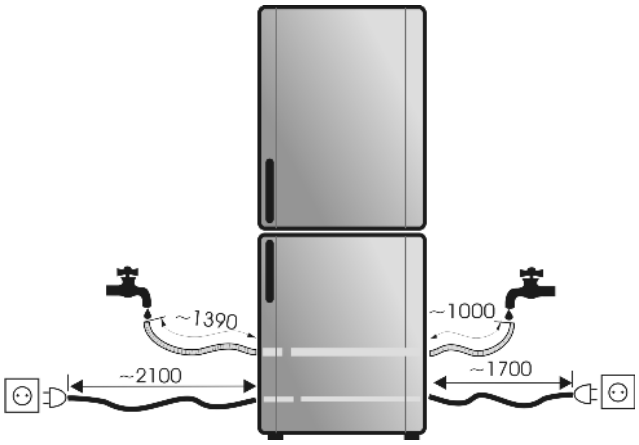

Fig. 24

- The water pressure has to be between 0.15 MPa and 0.6 MPa (1.5 bar - 6 bar).
- The water supply to the appliance must be via a cold water pipe which withstands the operating pressure and complies with the hygiene regulations.
  Use the accompanying stainless steel hose (1.5 m). Do not reuse old hoses. A 3 m hose is available from the customer service department and has to be fitted by an expert.
  In the hose connecting piece is a sieve with seal.
- Between the hose and the domestic water connection there has to be a stopcock to interrupt the water supply in case of need.
- All the fixtures and fittings used for water supply have to comply with the applicable regulations of the respective country.
- Do not damage or kink the water inlet pipe when installing the appliance.

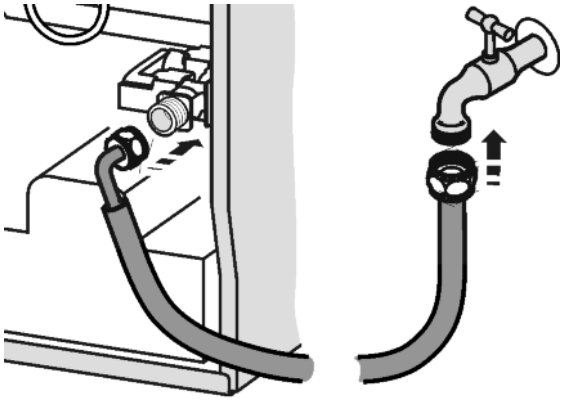

Fig. 25

▶ Connect the straight part of the accompanying stainless steel hose to the stopcock.

The solenoid valve is at the bottom back of the appliance. It has a metric R3/4 connecting thread.
▶ Connect the angled part of the stainless steel hose to the solenoid valve.
▶ Open the stopcock of the water supply and check that the entire water system is leakproof.
Before initial use:
▶ Have the water pipe bled of air by the proper expert.

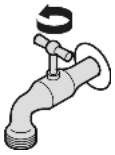

4.5 Insertion into a row of kitchen units

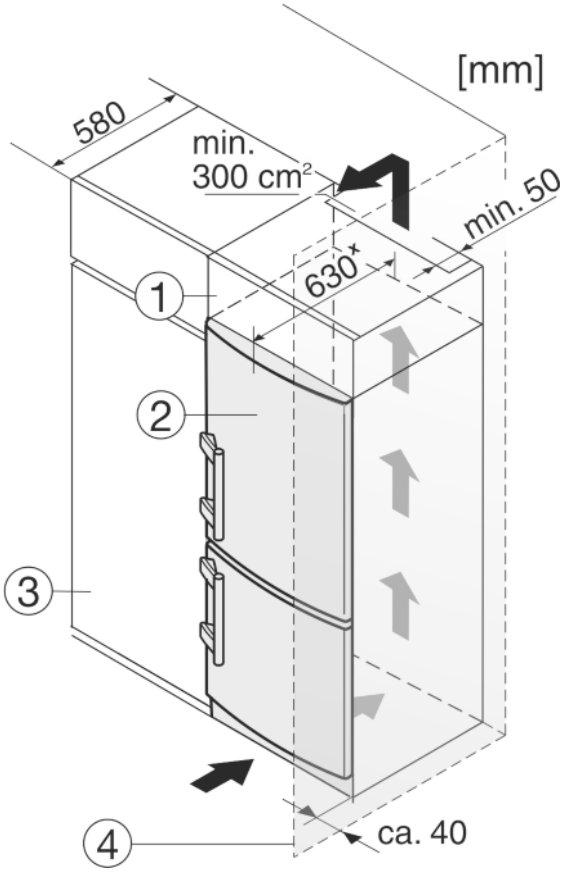

Fig. 26

(1) Stack cabinet
(2) Appliance
(3) Kitchen cabinet
(4) Wall

x For appliances supplied with wall spacers, the measurement increases by 35 mm (see 4.2) .

The appliance can be built into kitchen units. A top cupboard *Fig. 26 (2)* can be added above the appliance in order to bring the appliance *Fig. 26 (1)* up to the height of the fitted kitchen units.

When installing with kitchen units (max. depth 580 mm), the appliance can be positioned directly next to the kitchen cabinet *Fig. 26 (3)*. The appliance will project by 34 mm[x] at the sides and 50 mm[x] in the centre of the appliance in relation to the kitchen cabinet front.

Ventilation requirements:

- At the back of the stack cabinet there has to be a ventilation duct of at least 50 mm depth throughout the width of the stack cabinet.
- The cross section of the ventilation gap below the ceiling must be at least 300 cm^2.
- the larger the ventilation space, the more energy-saving the appliance is in operation.

If the appliance is installed with the hinges next to a wall *Fig. 26 (4)*, the distance between appliance and wall has to be at least 40 mm. This corresponds to the projection of the handle when the door is open.

4.6 Disposing of packaging

WARNING
Danger of suffocation due to packing material and plastic film!
▶ Do not allow children to play with packing material.

The packaging is made of recyclable materials:

- corrugated board/cardboard
- expanded polystyrene parts
- polythene bags and sheets
- polypropylene straps
- nailed wooden frame with polyethylene panel*

▶ Take the packaging material to an official collecting point.

4.7 Connecting the appliance

NOTICE
Failure to connect properly
Damage to the electronics.
▶ Do not use a standalone inverter.
▶ Do not use an energy saving plug.

WARNING
Failure to connect properly
Fire.
▶ Do not use an extension cable.
▶ Do not use distributor blocks.

Current type (alternating current) and voltage at the installation site must be in conformity with the data on the type plate situated inside the appliance, on the left.
The socket must be properly earthed and fused. The tripping current for the fuse must be between 10 A and 16 A.

It must be easily accessible so that the appliance can be quickly disconnected from the supply in an emergency. It must be outside the area of the rear of the appliance.
▶ Plug in the power plug.

When the language selection is indicated in the display:
▶ To select the language: Move the cursor down using the Down button *Fig. 3 (7)*, move the cursor up using the Up button *Fig. 3 (6)*.
▶ Confirm with the OK button *Fig. 3 (3)*.



4.8 Switching on the appliance

4.8.1 Switching on the refrigerator compartment

The appliance is supplied in the switched-off state.

If you want to switch on the entire appliance, you only have to switch on the refrigerator compartment. The freezer compartment is automatically switched on as well.

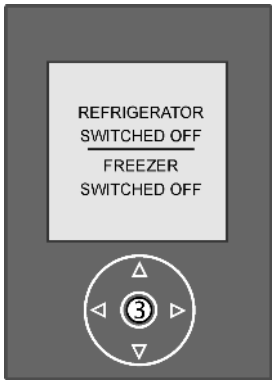

Switch on the appliance approx. 2 hours before adding frozen food for the first time.

Do not add frozen food until the temperature display indicates -18 °C.

▶ Activate the MAIN MENU.
▶ Activate the REFRIGERATOR menu
▶ Set the cursor to ON/OFF.
▶ Press OK button *Fig. 3 (3)*.
▷ The ON/OFF menu is displayed.
▶ Press OK button *Fig. 3 (3)*.
▷ The current cooling temperature is displayed in the temperature display refrigerator compartment *Fig. 3 (1)*. The preset temperature is indicated above.
▷ The temperature display freezer compartment flashes until the temperature is cold enough. If the temperature is above 0 °C, dashes flash. If it is below, the current temperature flashes. The preset temperature is indicated underneath.

EN

5 Control

5.1 Setting the language of the display



- ▶ Activate the main menu.
- ▶ Activate the ADDITIONAL FUNCTIONS -> CONFIGURATION -> LANGUAGE menu items one after the other.
- ▷ The language selection is indicated in the display.
- ▶ Set the cursor to the language wanted.
- ▶ Press OK button *Fig. 3 (3)*.
- ▷ All the menu texts will be displayed in the language now selected.

5.2 Brightness of the temperature display

You can adjust the brightness of the temperature display to the light conditions of the room in which the appliance is installed.

5.2.1 Adjusting the brightness



The brightness is adjustable between 0 (min. luminosity) and 5 (max. luminosity).

- ▶ Activate the main menu.
- ▶ Activate the ADDITIONAL FUNCTIONS -> CONFIGURATION -> LIGHTING menu items one after the other.
- ▷ The LIGHTING menu is displayed.
- ▶ Press OK button *Fig. 3 (3)*.
- ▶ For a brighter setting: Press Up button *Fig. 3 (6)*.
- ▶ For a darker setting: Press Down button *Fig. 3 (7)*.
- ▶ Press OK button *Fig. 3 (3)*.
- ▷ The new setting is accepted.



5.3 Contrast of the temperature display

You can adjust the contrast between lettering and background in the temperature display.

5.3.1 Adjusting the contrast

The contrast is adjustable between 1 (low contrast) and 10 (high contrast).

- ▶ Activate the MAIN MENU.
- ▶ Activate the ADDITIONAL FUNCTIONS -> CONFIGURATION -> CONTRAST menu items one after the other.
- ▶ For a higher contrast setting: Press Up button *Fig. 3 (6)*.
- ▶ For a lower contrast setting: Press Down button *Fig. 3 (7)*.
- ▶ Press OK button *Fig. 3 (3)*.
- ▷ The new setting is accepted.



5.4 Storage time readout

- ▶ Activate the MAIN MENU.
- ▶ Activate the STORAGE TIME menu item.
- ▷ An info text about the storage time of food is displayed.
- ▶ Press OK button *Fig. 3 (3)*.

-or-

- ▶ Wait for 30 seconds.
- ▷ The STORAGE TIME menu is displayed again.
- ▶ Activate one of the groups of food.
- ▷ An A to Z table appears in the display. The letters stand for the first letters of the food looked for.
- ▶ Set the cursor to the letter wanted.
- ▶ Press OK button *Fig. 3 (3)*.
- ▷ A list of food names appears in the display. The cursor is at the first food type beginning with the previously selected letter. If a letter is selected which does not exist as an initial letter in the list, the cursor is at the next letter.



BioFresh:



BioFreshPlus:

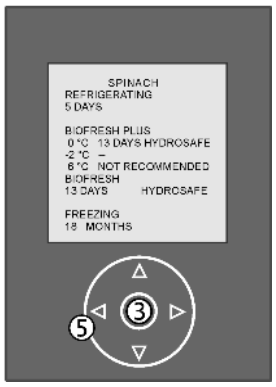

- ▶ Confirm the corresponding food type with the OK button *Fig. 3 (3)*.
- ▷ The recommended storage time is indicated in the display.
- ▷ The storage periods relate to the respective storage location. "--" signifies unsuited.
- ▶ To go back to the groups of food: Press left button *Fig. 3 (5)*.
- ▶ To go back to the temperature display: Press OK button *Fig. 3 (3)*.

5.5 Child proofing

The child-proofing function enables you to make sure that the appliance is not inadvertently switched off by playing children.



5.5.1 Activating the child lock

- ▶ Activate the MAIN MENU.

*** Depending on model and options**

▶ Activate the ADDITIONAL FUNCTIONS -> CHILD LOCK -> INFO menu items one after the other.
▷ The info text in the display describes the purpose of the child lock.
▶ Press the left button *Fig. 3 (5)* until ON and INFO are indicated in the display.
▶ Activate ON.
▷ The child lock is switched on. The
▷ No settings can be made. If any button is pressed, an info text appears. The appliance settings can be changed after pressing the OK button for 3 seconds

5.5.2 Deactivating the child lock

▶ Activate the MAIN MENU.
▶ Activate the ADDITIONAL FUNCTIONS -> CHILD LOCK -> OFF menu items one after the other.
▷ The child lock is deactivated. The child lock symbol goes out.

5.6 Door alarm

For the fridge, BioFresh and freezer compartments
An audible warning sounds if the door is open for longer than 60 seconds.

The following appears on the display: PLEASE CLOSE THE DOOR.

The audible warning stops automatically when the door is closed.

The display shows the temperature of the part of the appliance that triggered the alarm.

5.6.1 Muting the door alarm

The audible alarm can be muted when the door is open. The sound switch-off function is active as long as the door is left open.
▶ PressOK button *Fig. 3 (3)*
▷ The door alarm is silenced.
▷ The temperature is indicated in the display. The display changes to the normal temperature display.

5.7 Temperature alarm

The audible alarm sounds if the freezer temperature is not cold enough.

The display reads: TEMPERATURE TOO HIGH.

The cause of the temperature being too high may be:

- warm fresh food was placed inside
- too much warm ambient air flowed in when rearranging and removing food
- power failure for some time
- the appliance is faulty

The audible alarm is automatically silenced when the temperature is sufficiently cold again.

If the alarm status persists: (see Malfunction).

Note
Food may be spoilt if the temperature is not cold enough.
▶ Check the quality of the food. Do not consume spoiled food.

5.7.1 Muting the temperature alarm

The audible alarm can be muted. When the temperature is sufficiently cold again, the alarm function is active again.
▶ Press OK button *Fig. 3 (3)*.
▷ The audible alarm is silenced.
▷ The display changes back to temperature display.

5.8 Refrigerator compartment

The natural circulation of air in the refrigerator compartment results in zones differing in temperature. It is coldest directly above the plate separating off the BioFresh zone and at the rear wall. It is warmest at the top front of the compartment and in the door.

5.8.1 Food refrigeration

Note
The energy consumption increases and the cooling performance decreases if the ventilation is inadequate.
▶ Always keep the air slits of the fan free.

▶ Place butter and preserves in the upper area and in the door (see Appliance at a glance).
▶ Use recyclable plastic, metal, aluminium and glass containers and cling film for wrapping.
▶ Use the front area of the refrigerator compartment floor only for briefly putting down cooled products, e.g. when rearranging and sorting. However do not leave cooled products there otherwise they may be pushed back or tipped over when the door is closed.
▶ Do not store food too close together to enable good air circulation.
▶ To safeguard bottles from tipping over: move the bottle holder.

At the base of the refrigerator compartment, the integrated bottle shelf or alternatively the glass shelf can be used:

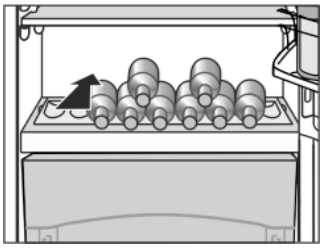

▶ To use the bottle shelf: store the glass shelf compactly under the bottle shelf.
▶ Place the bottles with the base pointing backwards facing the rear wall.
If the bottles project beyond the bottle shelf:
▶ set the lower door rack one position higher.

5.8.2 Adjusting the temperature

The temperature is adjustable from +9 °C to +3 °C / for appliances with BioFreshPlus +9 °C to +2 °C, the recommended temperature is +5 °C.
▶ Activate the MAIN MENU.
▶ Activate the REFRIGERATOR -> TEMPERATURE menu items one after the other.
▷ An info text on the recommended refrigerator temperature appears. Then the current temperature is displayed at the top and the temperature desired at the bottom.
To alter the temperature in 1 °C steps: press the button briefly.
To change the temperature continuously: hold down the button.

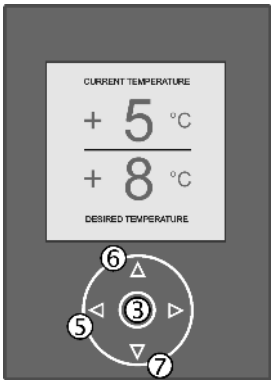

▶ To set a higher temperature: Press Up button *Fig. 3 (6)*.
▶ To set a lower temperature: Press Down button *Fig. 3 (7)*.
▶ To accept the setting: Press OK button *Fig. 3 (3)*.
▷ The refrigerator temperature slowly adjusts itself to the new value.
▶ To cancel the operation: Press left button *Fig. 3 (5)*.

-or-

▶ Do not press any button for 10 seconds.

5.8.3 SuperCool

With SuperCool you switch to the highest cooling performance to reach lower cooling temperatures. Use SuperCool, to rapidly cool large amounts of food.

The SuperCool function uses slightly more energy.

Cooling with SuperCool

▶ Activate the MAIN MENU.
▶ Activate the REFRIGERATOR -> SUPERCOOL -> INFO menu items one after the other.
▷ The info text in the display describes the purpose for which SuperCool is used.
▶ Press the OK button *Fig. 3 (3)* until ON and INFO are indicated in the display.
▶ Select ON.
▶ Press OK button *Fig. 3 (3)*.
▷ SuperCool is activated.
▷ SuperCool is automatically deactivated after 6 to 12

To deactivate SuperCool ahead of time

▶ Activate the MAIN MENU.
▶ Activate the REFRIGERATOR -> SUPERCOOL -> OFF menu items one after the other.
▷ SuperCool is deactivated.

5.8.4 Holiday mode

The holiday mode saves energy and prevents odour from occurring when the door of the refrigerator compartment stays closed for a lengthy period.

The freezer compartment remains in operation in the holiday mode.

Activating the holiday mode

▶ Remove all the food.
▶ Activate the MAIN MENU.
▶ Activate the REFRIGERATOR -> HOLIDAY-> INFO menu items one after the other.
▷ The info text in the display describes the purpose for which holiday mode is used.
▶ Press the OK button *Fig. 3 (3)* until ON and INFO are indicated in the display.
▶ Set the cursor to ON.
▶ Press OK button *Fig. 3 (3)*.
▷ The holiday mode is activated. HOLIDAY is indicated in the display at the top instead of refrigerator compartment temperature.

Deactivating the holiday mode

▶ Activate the MAIN MENU.
▶ Activate the REFRIGERATOR -> HOLIDAY -> OFF menu items one after the other.
▷ The holiday mode is deactivated.

5.8.5 Shelves

Moving or removing shelves

The shelves have stops preventing them from being unintentionally pulled out.

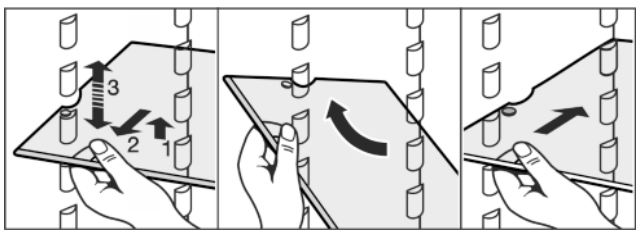

Fig. 27

▶ Lift the shelf slightly and pull forward a little.
▶ Adjust the height of the shelf. To do so, push the cut-outs along the supports.
▶ In order to remove the shelf fully, place it at a slant and pull out towards the front.
▶ Re-insert shelves at the required height. The stops must face downwards and lie behind the front shelves.

Dismantling shelves

▶ The shelves can be dismantled for cleaning.

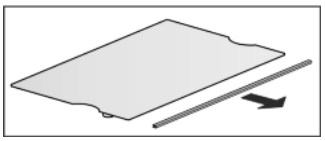

5.8.6 Using the sectioned shelf

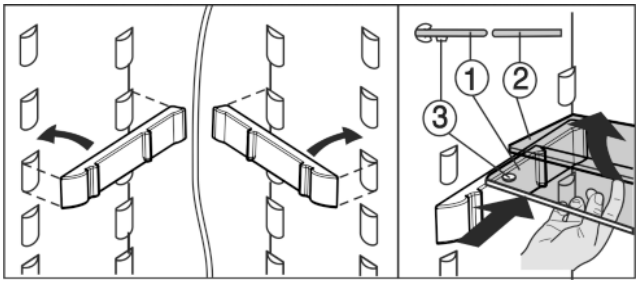

Fig. 28

▶ The glass plate (1) with pull-out stops must be at the front so that the stops (3) face downwards.

5.8.7 Door racks

Moving the storage rack

▶ Remove storage rack according to illustration.

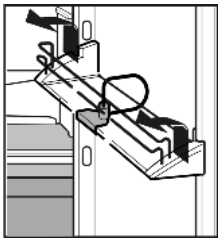

The boxes can be removed and placed on the table as a single unit.

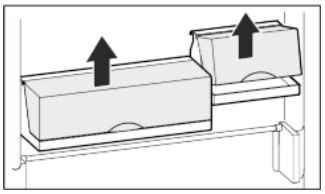

Three small boxes are available through the customer service as optional equipment instead of one wide and one small box.

Either one or both the boxes can be used. If particularly tall bottles are to be stored, hang only a single box above the bottle rack.

▶ Re-positioning the boxes: Lift them for removal and reposition them as required.

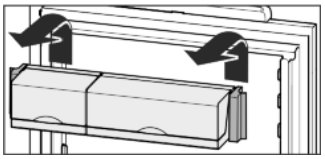

Dismantling door racks

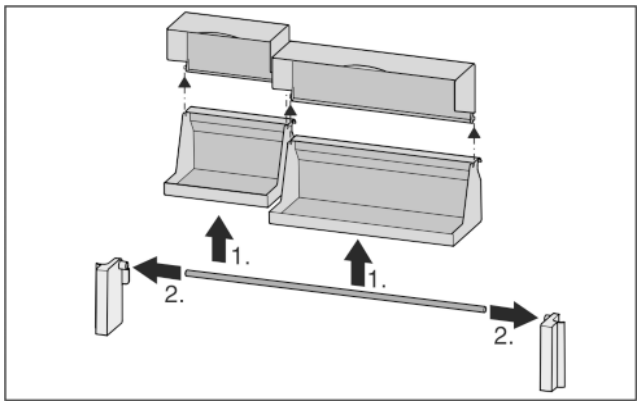

Fig. 29

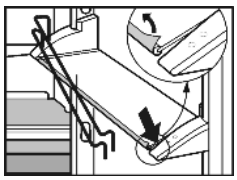

▶ The door racks can be dismantled for cleaning.

5.8.8 Removing the bottle holder

▶ Always take hold of the bottle holder on the plastic part.

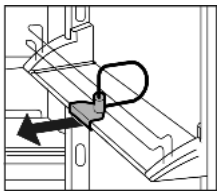

5.9 BioFresh compartment

The BioFresh compartment allows some types of fresh food to be stored up to three times longer than in conventional refrigerators, without compromising quality.

For food with an indicated best before date, the date specified on the packaging always applies.

5.9.1 HydroSafe

The HydroSafe at the moist setting is suited for storing unwrapped salad, vegetables and fruit with high inherent moisture. When the drawer is well filled, a dewy climate with up to 90% humidity is established. The humidity in the compartment depends on the moisture content of the food stored and on the opening frequency. You can set the humidity yourself.

5.9.2 DrySafe

The DrySafe is suitable for storing dry or wrapped food (e.g. dairy products, meat, fish, sausages). A relatively dry storage climate is established here.

5.9.3 BioFreshPlus compartment (adjustable)*

The adjustable BioFreshPlus compartment is suited for storing seafood, fruit/vegetables or tropical fruits, depending on setting.

5.9.4 Storing food

Note

▶ Vegetables sensitive to cold, such as cucumbers, aubergines, semi-ripe tomatoes, zucchinis and all tropical fruits sensitive to cold, do not belong in the BioFresh compartment.

▶ Store citrus and tropical fruits in the BioFreshPlus compartment at +6 °C.*

▶ To prevent food spoilage due to transfer of germs: Store unwrapped animal and vegetable products separate from one another in the drawers. This also applies to different sorts of meat.
If food has to be stored together due to lack of space:

▶ wrap the food.

5.9.5 Storage times*

Standard values for storage time at low humidity			
Butter	up to	90	days
Hard cheese	up to	110	days
Milk	up to	12	days
Sausage, cold meat	up to	9	days
Poultry	up to	6	days
Pork	up to	7	days
Beef	up to	7	days
Game	up to	7	days

Note

▶ Please note that protein-rich food deteriorates faster, i.e. shellfish and crustaceans deteriorate faster than fish, fish faster than meat.

Standard values for storage time at high humidity			
Vegetables, salad			
Artichokes	up to	14	days
Celery	up to	28	days
Cauliflower	up to	21	days
Broccoli	up to	13	days
Chicory	up to	27	days
Lamb's lettuce	up to	19	days
Peas	up to	14	days
Kale	up to	14	days
Carrots	up to	80	days
Garlic	up to	160	days
Kohlrabi	up to	55	days
Lettuce	up to	13	days
Herbs	up to	13	days
Leek	up to	29	days
Mushrooms	up to	7	days
Radishes	up to	10	days
Brussels sprouts	up to	20	days
Asparagus	up to	18	days
Spinach	up to	13	days
Savoy cabbage	up to	20	days
Fruit			
Apricots	up to	13	days
Apples	up to	80	days
Pears	up to	55	days

Standard values for storage time at high humidity			
Blackberries	up to	3	days
Dates	up to	180	days
Strawberries	up to	7	days
Figs	up to	7	days
Blueberries	up to	9	days
Raspberries	up to	3	days
Currants	up to	7	days
Sweet cherries	up to	14	days
Kiwis	up to	80	days
Peaches	up to	13	days
Plums	up to	20	days
Cranberries	up to	60	days
Rhubarb	up to	13	days
Gooseberries	up to	13	days
Grapes	up to	29	days

Additional standard values for storage time in the BioFreshPlus compartment				
Seafood				
Crab	at -2 °C	up to	4	days
Mussels	at -2 °C	up to	6	days
Sushi	at -2 °C	up to	4	days
Tropical fruits				
Papaya	at 6 °C	up to	15	days
Prickly pear	at 0 °C	up to	20	days
Passion fruit	at 6 °C	up to	24	days
Lemons	at 6 °C	up to	45	days
Limes	at 6 °C	up to	55	days

5.9.6 Setting the temperature for BioFreshPlus on the control panel*

▶ The temperature for the BioFreshPlus compartment can be set separately on the control panel. (see Appliance at a glance)



Fig. 30

▶ Setting for fish and seafood: Press -2 °C button.
▶ Setting as normal BioFresh compartment: Press 0 °C button.
▶ Setting for tropical fruits: Press 6 °C button.

5.9.7 Setting the temperature for BioFreshPlus on the display*

▶ As an alternative to control panel setting, the temperature in the BioFreshPlus compartment can be set on the display.

▶ Activate the MAIN MENU.
▶ Activate the COOLING -> BIOFRESHPLUS menu items one after the other.
▷ The current temperature appears at the top and the temperature wanted appears at the bottom of the display.
▶ To set the temperature higher: Press the Up button *Fig. 3 (6)*.
▶ To set the temperature lower: Press the Down button *Fig. 3 (7)*.
▶ To accept the setting: Press the OK button *Fig. 3 (3)*.
▷ The BioFresh temperature slowly adjusts to the new value.
▶ To stop the operation: Press the Left button *Fig. 3 (5)*.

-or-

▶ Do not press any button for 10 s.

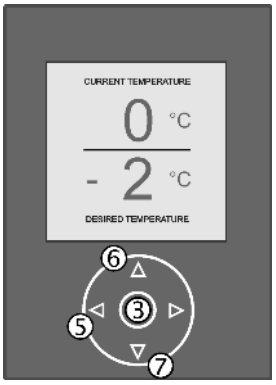

5.9.8 Adjusting the temperature in the BioFresh compartment

The temperature is set automatically. In the Biofresh compartment it is between 0 °C and 3 °C. Depending on the setting it is set to 0 °C, —2 °C or 6 °C in the Biofresh plus compartment.

The temperature in the BioFresh compartment and in the BioFreshPlus* compartment can be set separately to a slightly colder or warmer level. The temperature can be set in a range between B1/U1* (coldest temperature) to B9/U9* (warmest temperature). The default is B5/U5*.

▶ Activate the ADDITIONAL FUNCTIONS menu.
▶ Activate BIOFRESH OR BIOFRESHPLUS*.
▶ Select INFO.
▶ Press OK button *Fig. 3 (3)*.
▷ The info text in the display shows the BioFresh temperature setting range.
▶ Press the left button *Fig. 3 (5)* until SETTING and INFO are indicated in the display.

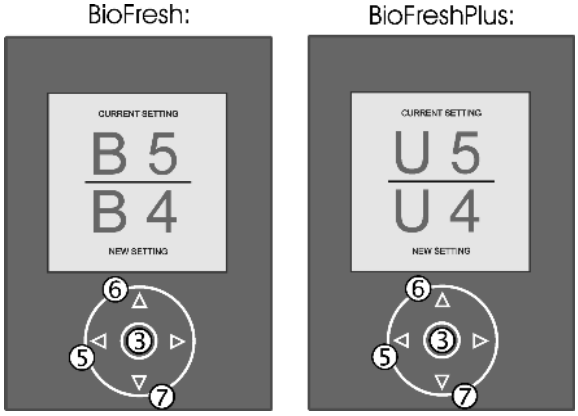

Fig. 31

▶ Set the cursor to SETTING.
▶ Press OK button *Fig. 3 (3)*.
▷ The current setting is shown at the top and the new setting is shown at the bottom in the display.

Note

If the setting is changed in the colder direction, B4 to B1 or U4 to U1*, minus temperatures can be reached.

▶ Food can freeze in the BioFresh compartments. Damage due to cold is possible.

▶ For a warmer temperature setting (B6 to B9 or U6 to U9*): Press Up button *Fig. 3 (6)*.

-or-

▶ For a colder temperature setting (B4 to B1 or U4 to U1*): Press Down button *Fig. 3 (7)*.

▶ To accept the setting: Press OK button *Fig. 3 (3)*.
▶ To cancel the operation: Press left button *Fig. 3 (5)*.

5.9.9 Setting the humidity in the HydroSafe

▶ Low humidity: move the regulator to the left.
▶ High humidity: move the regulator to the right.

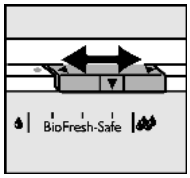

5.9.10 Drawers

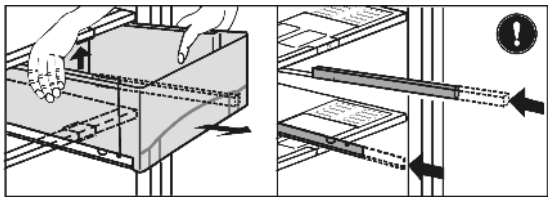

Fig. 32

▶ Pull out the drawer, lift it at the back and draw it forwards for removal.
▶ Replace the racks.

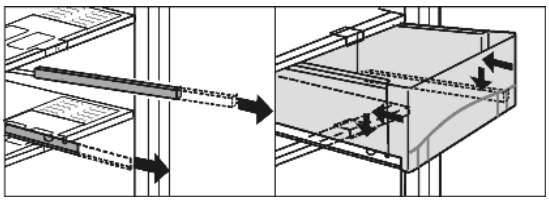

Fig. 33

▶ Pull out the rails.
▶ Attach the drawer to the rails and push it in until it engages audibly at the back.

5.9.11 Humidity control plate

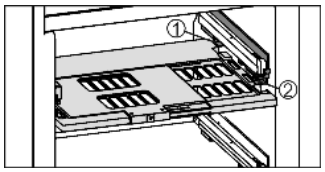

Fig. 34

▶ To remove the humidity control plate: Having removed the drawers, carefully draw the plate forwards and lower it for removal.
▶ To insert the humidity control plate: Insert the cover mouldings of the plate into the rear holder *Fig. 34 (1)* from underneath and engage them in the holder *Fig. 34 (2)* at the front.

5.10 Freezer compartment

You can store frozen food, make ice cubes and freeze fresh food in the freezer compartment.

5.10.1 Freezing food

The rating plate indicates the maximum quantity of fresh food you can freeze within 24 hours (see Appliance at a glance) under “Freezing capacity ... kg/24h”.

The maximum load of frozen food for the drawers is 25 kg each and for the shelves 35 kg each.

CAUTION
Risk of injury due to broken glass!
Bottles and cans containing drinks may burst when being frozen. This applies particularly to sparkling drinks.
▶ Do not freeze bottles and cans containing drinks!

In order that the food is rapidly frozen through to the core, do not exceed the following quantities per pack:

- Fruit, vegetables up to 1 kg
- Meat up to 2.5 kg

▶ Pack the food in portions in freezer bags, reusable plastic, metal or aluminium containers.

5.10.2 Thawing food

- in the refrigerator compartment
- in a microwave oven
- in a conventional or fan oven
- at room temperature

▶ Food once thawed should be re-frozen only in exceptional cases.

5.10.3 Adjusting the temperature in the freezer compartment

The appliance is pre-set for normal operation.

The temperature can be set from -16 °C to 26 °C, the recommended temperature is -18 °C.

▶ Activate the MAIN MENU.
▶ Activate the FREEZER -> TEMPERATURE menu items one after the other.
▷ An info text on the recommended freezer temperature appears. Then the current temperature is indicated in the upper section of the display and the temperature desired is indicated in the lower section.
To alter the temperature in 1 °C steps: Press the button briefly.
To change the temperature continuously: Hold down the button.
▶ To set a higher temperature: Press Up button *Fig. 3 (6)*.
▶ To set a lower temperature: Press Down button *Fig. 3 (7)*.
▶ To accept the setting: Press OK button *Fig. 3 (3)*.
▷ The freezer temperature slowly adjusts itself to the new value.
▶ To cancel the operation: Press left button *Fig. 3 (5)*.

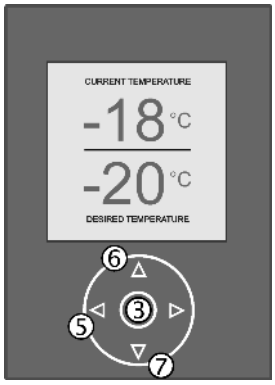

-or-

▶ Do not press any button for 10 seconds.

5.10.4 SuperFrost

With this function you can freeze fresh food quickly through to the core. The appliance operates with maximum refrigeration. The noise of the refrigeration unit may be temporarily louder as a result.

The maximum amount of fresh food which can be frozen in 24 h is indicated on the type plate under “freezing capacity ... kg/24h”. This amount varies according to the model and climate rating.

You have to activate SuperFrost in good time, depending on how much fresh food is to be frozen: about 6 hours before placing the food inside in case of small amounts and about 24 hours in advance in case of the maximum amount of food to be frozen.

Wrap produce and spread it out as far as possible. Do not allow produce to be frozen to touch produce that is already frozen to prevent the latter thawing.

You do not have to activate SuperFrost in the following cases:

- when placing frozen food in the freezer
- when freezing up to approx. 2 kg fresh food daily

Freezing with SuperFrost

▶ Activate the MAIN MENU.
▶ Activate the FREEZER -> SUPERFROST -> ON menu items one after the other.
▷ SuperFrost is activated.
▷ The freezer temperature drops, the appliance operates with the maximum refrigerating capacity.
In case of a small amount of food to be frozen:
▶ wait about 6 h.
▶ Place wrapped produce in the top drawers.
In case of the maximum amount of food to be frozen:
▶ wait about 24 h.
▶ Remove top drawers and place produce directly on the top shelves.
▷ SuperFrost is automatically deactivated. At the earliest after 30 h, at the latest after 60 h, depending on quantity placed inside.
▷ Freezing is concluded.
▶ Place produce in the drawers and push the latter back in again.
▷ The appliance continues to operate in the energy-saving, normal mode.

Deactivating SuperFrost ahead of time

▶ Activate the MAIN MENU.
▶ Activate the FREEZER -> SUPERFROST -> OFF menu items one after the other.
▷ SuperFrost is deactivated.

5.10.5 Drawers

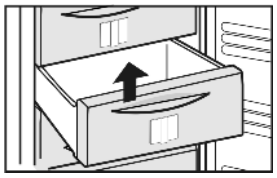

▶ To store frozen food directly on the shelves: pull the drawer forwards and lift it out.

5.10.6 Shelves

▶ To remove the shelf: lift up at the front and pull out.
▶ To put the shelf back: simply push in as far as it will go.

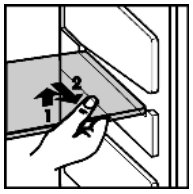

5.10.7 VarioSpace

Apart from being able to remove the drawers, you can also remove the shelves, creating space for large items of frozen food. Poultry, meat, large pieces of game and high bakery products can be frozen in one piece and prepared.

▶ The maximum load of frozen food for the drawers is 25 kg each and for the shelves 35 kg each.

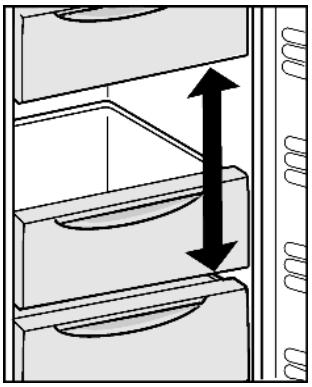

5.10.8 Information system



Fig. 35

(1) Ready-made meals, ice cream
(2) Pork, fish
(3) Fruit, vegetables
(4) Sausages, bread
(5) Game, mushrooms
(6) Poultry, beef/veal

The figures indicate the storage time in months for several types of frozen food in each case. Storage times given are guide times.

5.10.9 Cold storage accumulators

The cold storage accumulators prevent the temperature from rising too fast in the event of power failure.

Using cold storage accumulators

▶ Place the cold storage accumulators in the top freezer compartment to save space.
▶ Place the frozen cold storage accumulators on the frozen food in the upper front area of the freezer compartment.*

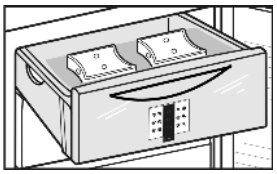

5.10.10 IceMaker

The IceMaker is in the top drawer of the freezer compartment. The drawer is marked “IceMaker”.

Make certain that the following conditions are met:

- The appliance is level.
- The appliance is connected.
- The freezer compartment is switched on.
- The IceMaker is connected to the water supply.

Switching on the IceMaker

The water connection of the appliance has to be established.

▶ MAIN MENU.
▶ Activate the FREEZER -> ICEMAKER -> INFO menu items one after the other.
▷ The info text in the display describes what has to be noted for IceMaker use.
▶ Press the left button *Fig. 3 (5)* until ON and INFO are indicated in the display.
▶ Activate ON.
▷ The IceMaker is switched on. is indicated in the display.
is indicated if the ice cube compartment is full.

*** Depending on model and options**

Switching off the IceMaker

▶ Activate the MAIN MENU.
▶ Activate the FREEZER -> ICEMAKER -> OFF menu items one after the other.
▷ The IceMaker is switched off.

Producing ice cubes

The production capacity depends on the freezer temperature. The lower the temperature, the more ice cubes can be produced in a specific period.

The ice cubes drop from the IceMaker into the drawer. When a certain filling level has been reached, no further ice cubes are produced. The IceMaker does not fill the drawer right up to the brim.

If large quantities of ice cubes are needed, the complete IceMaker drawer can be exchanged for the adjacent drawer. When the drawer is closed, the IceMaker automatically re-commences production.

Once the IceMaker has been switched on for the first time, it may take up to 24 hours until the first ice cubes are produced.

Note
When the appliance is used for the first time and if it has been out of use for a long time, particles may collect in the IceMaker and/or water conduit.
▶ Therefore do not use or consume the ice cubes made in the first 24 hours.

Adjusting the water intake time

The opening time of the IceMaker valve can be adjusted if, for example, the water pressure in the line is too low or too high. The water intake time is adjustable in steps from E1 (short intake time) to E8 (long intake time). If the intake time is too long, then e.g. large ice cubes or a block of ice may form, in which case reduce the intake time.

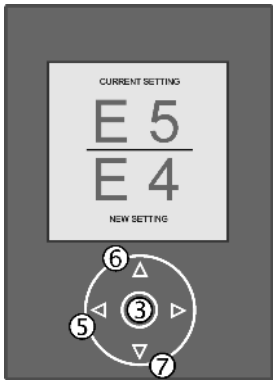

Fig. 36

▶ Activate the MAIN MENU.
▶ Activate the FREEZER -> ICEMAKER -> WATER INTAKE menu items one after the other.
▶ To decrease the water intake time: Press Up button *Fig. 36 (6)*.
-or-
▶ To increase the water intake time: Press Down button *Fig. 36 (7)*.

6 Maintenance

6.1 Defrosting with NoFrost

The NoFrost system automatically defrosts the appliance.

Refrigerator compartment:

The defrost water evaporates due to the compressor heat.
▶ Regularly clean the drain opening to allow the water to flow away (see 6.2) .

Freezer compartment:

The moisture condenses on the evaporator, is periodically defrosted and evaporates.
▶ The appliance does not have to be manually defrosted.

6.2 Cleaning the appliance

WARNING
Risk of injury and damage as a result of hot steam!
Hot steam can lead to burns and can damage the surfaces.
▶ Do not use any steam cleaners!

NOTICE
Incorrect cleaning damages the appliance!
▶ Do not use cleaning agents in concentrated form.
▶ Do not use any scouring or abrasive sponges or steel wool.
▶ Do not use any sharp or abrasive cleaning agents, nor any that contain sand, chloride or acid.
▶ Do not use chemical solvents.
▶ Do not damage or remove the type plate on the inside of the appliance. It is important for the customer service.
▶ Do not pull off, bend or damage cables or other components.
▶ Do not allow any cleaning water to enter the drain channel, ventilation grille or electrical parts.
▶ Please use soft cleaning cloths and a universal pH-neutral cleaning agent.
▶ Please use cleaning and care products suitable for contact with foodstuffs in the appliance interior.

▶ **Empty appliance.**
▶ **Pull out the power plug.**



▶ Clean **plastic outer and inner surfaces** with lukewarm water and a little washing-up liquid.

NOTICE
The stainless steel doors are treated with a high quality surface coating and must not be treated with stainless steel care products.

Otherwise the surface coating will be affected. Smart Steel
▶ **Coated door surfaces** and **painted side walls** must only be wiped with a soft, clean cloth. If they are very dirty, use a little water or a neutral cleaner. A microfibre cloth may also be used.
▶ If the **stainless steel side walls** are dirty, clean them using a commercially available stainless steel cleaning agent. Then evenly apply the accompanying stainless steel care product, making strokes in the direction of the grain.

▶ Clean **drain hole**: Remove deposits with a narrow instrument, e.g. a cotton bud.

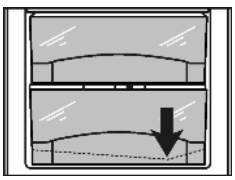

▶ Most of the **parts** can be dismantled for cleaning: see the relevant chapter.
▶ Clean **items of equipment** by hand with lukewarm water and a little washing-up liquid.
▶ Only use a damp cloth to clean the **telescopic rails**. The grease in the runners is for lubrication purposes and must not be removed.

After cleaning:
▶ Wipe dry the appliance and items of equipment.
▶ Connect the appliance and switch it on again.
▶ Switch on SuperFrost (see 5.10.4) .

6.3 Cleaning the IceMaker

The ice cube container has to be empty and slid into place.

- ▶ Activate the MAIN MENU.
- ▶ Activate the FREEZER -> ICEMAKER -> TWISTCLEAN menu items one after the other.
- ▶ Set the cursor to INFO.
- ▶ Press OK button *Fig. 3 (3)*.
- ▷ The info text in the display describes the use of the Twist-Clean function.
- ▶ Press the left button *Fig. 3 (5)* until START and INFO are indicated in the display.
- ▶ Set the cursor to START.
- ▶ Press OK button *Fig. 3 (3)*.
- ▷ TwistClean appears in the display at the bottom, the IceMaker moves into cleaning position.
  When TWISTCLEAN goes out in the display:
- ▶ Remove ice cube container and clean with warm water and a little washing-up liquid.
- ▶ Slide ice cube container back into place.

Either leave the IceMaker switched off in this position or switch it on again via MAIN MENU -> FREEZER -> ICEMAKER -> ON.

6.4 Changing the interior light with bulb*

Bulb data

T25 tube, Philips
max. 25 W
Fitting: E14
Type of current and voltage must conform with the details on the type plate

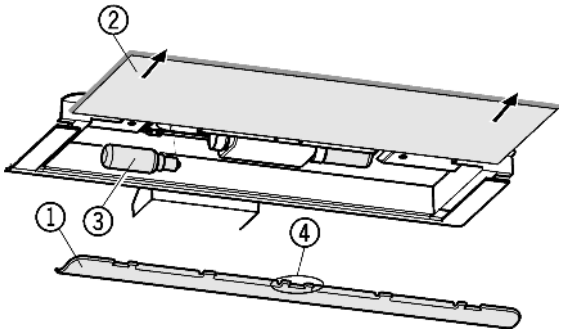

Fig. 37

- ▶ Switch off the appliance.
- ▶ Pull out the power plug or switch off the fuse.
- ▶ To remove the cover *Fig. 37 (1)*: put your finger behind the cover and disengage it.
- ▶ Pull out the glass shelf *Fig. 37 (2)*.
- ▶ Change the bulb *Fig. 37 (3)*.
- ▶ Slide the glass shelf back in.
- ▶ Attach the cover again, engage it at the right and left and pay attention that the middle hook *Fig. 37 (4)* grips over the glass shelf.

6.5 Customer service

First check whether you can correct the fault yourself by reference to the list (see Malfunction). If this is not the case, please contact the customer service whose address is given in the enclosed customer service list.

WARNING

Risk of injury if repair work is not carried out professionally!

- ▶ Have any repairs and action - not expressly specified - on the appliance and mains cable carried out by service personnel only. (see Maintenance)

- ▶ Read the appliance designation *Fig. 38 (1)*, service No. *Fig. 38 (2)* and serial No. *Fig. 38 (3)* off the type plate located inside the appliance on the left-hand side.

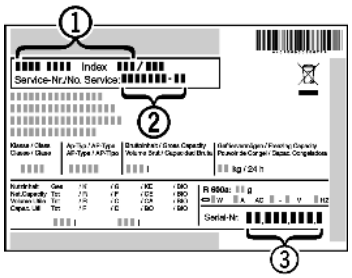

Fig. 38

- ▶ Notify the customer service, specifying the fault, appliance designation *Fig. 38 (1)*, service No. *Fig. 38 (2)* and serial No. *Fig. 38 (3)*.
- ▷ This will help us to provide you with a faster and more accurate service.
- ▶ Keep the appliance closed until the customer service arrives.
- ▷ The food will stay cool longer.
- ▶ Pull out the mains plug (not by pulling the connecting cable) or switch off the fuse.

7 Malfunctions

Your appliance is designed and manufactured for a long life span and reliable operation. If a malfunction nonetheless occurs during operation, check whether it is due to a handling error. In this case you will have to be charged for the costs incurred, even during the warranty period. You may be able to rectify the following faults yourself:

Appliance does not work.

- → The appliance is not switched on.
- ▶ Switch on the appliance.
- → The power plug is not properly inserted in the wall socket.
- ▶ Check power plug.
- → The fuse of the wall socket is not in order.
- ▶ Check fuse.

The compressor runs for a long time.

- → The compressor switches to a low speed when little cold is needed. Although the running time is increased as a result, energy is saved.
- ▶ This is normal in energy-saving models.
- → SuperFrost is activated.
- ▶ The compressor runs for longer in order to rapidly cool the food. This is normal.
- → SuperCool is activated.
- ▶ The compressor runs for longer in order to rapidly cool the food. This is normal.

A LED on the bottom rear of the appliance (at the compressor) flashes regularly every 15 seconds*.

- → The inverter is equipped with a diagnostic LED.
- ▶ The flashing is normal.

Excessive noise.

- → Due to the various speed steps, speed-regulated* compressors can generate different running noises.
- ▶ The sound is normal.

A bubbling and gurgling noise.

- → This noise comes from the refrigerant flowing in the refrigeration circuit.
- ▶ The sound is normal.

* Depending on model and options

A quiet clicking noise.
→ The noise is produced whenever the refrigeration unit (motor) automatically switches on or off.
▶ The sound is normal.

A hum. It is briefly a little louder when the refrigeration unit (the motor) switches on.
→ The refrigeration increases automatically when the SuperFrost, function is activated, fresh food has just been placed in the appliance or the door has been left open for a while.
▶ The sound is normal.
→ The refrigeration increases automatically when the SuperCool function is activated, fresh food has just been placed in the appliance or the door has been left open for a while.
▶ The sound is normal.
→ The ambient temperature is too high.
▶ Solution: (see 1.2)

A low hum.
→ The sound is produced by air flow noise of the fan.
▶ The sound is normal.

Vibratory noise.
→ The appliance is not fixed to the ground. The running of the cooling unit therefore makes objects and adjacent furniture vibrate.
▶ Adjust appliance via the height-adjustable feet.
▶ Move bottles and containers apart.

Flow sound at the soft stop mechanism.*
→ The noise is produced when the door is opened and closed.
▶ The sound is normal.

The temperature display indicates: F0 **to** F9
→ There is a fault.
▶ Please contact the after-sales service (see Maintenance).

The temperature display reads:FE
→ There is a fault.
▶ Please contact the after-sales service (see Maintenance).

DEMO shines in the temperature display.
→ The demo mode is activated.
▶ Please contact the after-sales service (see Maintenance).

The display indicates: POWER FAILURE**. The audible alarm sounds.**
→ The freezer temperature rose too high over the last hours or days due to a power failure or power interruption.
▶ To switch off the warning beep: press OK button *Fig. 3 (3)*.
▷ The display indicates the freezer temperature again.
▶ If POWER FAILURE continues to be displayed: Please contact the after-sales service (see Maintenance).
▶ Check the quality of the food. Do not consume spoiled food.

The outer surfaces of the appliance are warm*.
→ The heat of the refrigeration circuit is used to prevent condensate from forming.
▶ This is normal.

The IceMaker cannot be switched on.
→ The appliance and therefore the IceMaker are not connected.
▶ Connect the appliance to the mains (see Putting into operation).

The IceMaker does not make any ice cubes.
→ The IceMaker is not switched on.
▶ Switch on the IceMaker.
→ The drawer of the IceMaker is not properly closed.
▶ Close the drawer properly.
→ The water connection is not open.
▶ Open the water connection.
→ The water intake to the IceMaker has been interrupted.
▶ Check the water connection **(see Putting into operation)**.
▶ Check the hosing **(see Putting into operation)**.
→ The screen located in the end piece of the water intake hose or the screen located in the connecting piece on the appliance is blocked.
▶ Clean the screens.

The IceMaker symbol flashes.
→ There is a fault.
▶ Please contact the after-sales service (see Maintenance).

The display indicates: CHECK WATER SUPPLY**. The audible alarm sounds.**
→ A fault of the IceMaker has occurred.
▶ To switch off the warning bleep: press OK button *Fig. 3 (3)*.
▷ The temperature and fault of the IceMaker are indicated in the display.
▶ Check whether a handling error has been made.
▶ Please contact the after-sales service if it is not possible to correct the fault (see Maintenance).

The display indicates: ICE CUBE TRAY CANNOT BE EMPTIED**. The audible alarm sounds.**
→ A fault of the IceMaker has occurred.
▶ To switch off the warning bleep: press OK button *Fig. 3 (3)*.
▷ The temperature and fault of the IceMaker are indicated in the display.
▶ Check whether a handling error has been made.
▶ Please contact the after-sales service if it is not possible to correct the fault (see Maintenance).

The display indicates: SENSOR FAULT**. The audible alarm sounds.**
→ A fault of the IceMaker has occurred.
▶ To switch off the warning bleep: press OK button *Fig. 3 (3)*.
▷ The temperature and fault of the IceMaker are indicated in the display.
▶ Check whether a handling error has been made.
▶ Please contact the after-sales service if it is not possible to correct the fault (see Maintenance).

The display indicates: MECHANICAL FAULT**. The audible alarm sounds.**
→ A fault of the IceMaker has occurred.
▶ To switch off the warning bleep: press OK button *Fig. 3 (3)*.
▷ The temperature and fault of the IceMaker are indicated in the display.
▶ Check whether a handling error has been made.
▶ Please contact the after-sales service if it is not possible to correct the fault (see Maintenance).

The temperature is not cold enough.
→ The door of the appliance is not properly closed.
▶ Close the door of the appliance.
→ Insufficient ventilation.
▶ Keep ventilation grille clear, and clean it.
→ The ambient temperature is too high.
▶ Solution: (see 1.2) .
→ The appliance was opened too frequently or for too long.
▶ Wait to see whether the appliance reaches the required temperature by itself. If not, please contact the after sales service (see Maintenance).
→ Too much fresh food was placed inside without SuperFrost.
→ The temperature is incorrectly set.
▶ Set the temperature to a colder setting and check after 24 hours.
→ The appliance is too close to a source of heat (stove, heater etc).
▶ Change the position of the appliance or the source of heat.

The internal light does not come on.
→ The appliance is not switched on.
▶ Switch on the appliance.
→ The door was open longer than 15 min.

▶ The interior light automatically switches off if the door has been open for about 15 min.
→ The LED illumination is defective or the cover is damaged:*

WARNING*
Risk of injury due to electric shock!
Live parts are located under the cover.
▶ Have the LED interior light changed or repaired only by the customer service or by specialized personnel trained for the purpose.

WARNING*
Danger of injury by LED lamp!
The light intensity of the LED illumination corresponds to laser class 1/1M.
If the cover is defective:
▶ Do not look into the illumination with optical lenses from the immediate proximity. This can cause injury to the eyes.

→ If the interior light is not on but the temperature display is lit, the bulb is faulty.*
▶ Change the bulb (see Maintenance).*

8 Decommissioning

8.1 Switching off the appliance

Note
▶ To switch off the entire appliance, it is necessary only to switch off the freezer compartment. In so doing, the refrigerator compartment is automatically switched off as well.

8.1.1 Switching off the freezer compartment

The refrigerator compartment is automatically switched off as well!
▶ Activate the main menu.
▶ Activate the FREEZER menu.
▶ Set the cursor to ON/OFF.
▶ Press OK button *Fig. 3 (3)*.
▶ Set the cursor to INFO.
▶ Press OK button *Fig. 3 (3)*.
▷ The info text in the display describes how to switch the freezer compartment on and off.
▶ Press the left button *Fig. 3 (5)* the number of times needed until OFF and INFO are indicated in the display.
▶ Set the cursor to OFF.
▶ Press OK button *Fig. 3 (3)*.
▷ The freezer compartment is switched off.
▷ The appliance is switched off.

8.2 Taking the appliance out of service

▶ Empty the appliance.
▶ Put the IceMaker in the cleaning position (see Maintenance).
▶ Switch off the appliance (see Decommissioning).
▶ Remove mains connector.
▶ Clean the appliance (see 6.2) .



▶ Leave the door open to prevent odour.

9 Disposing of the appliance



The appliance contains some reusable materials and should be disposed of properly - not simply with unsorted household refuse. Appliances which are no longer needed must be disposed of in a professional and appropriate way, in accordance with the current local regulations and laws.

When disposing of the appliance, ensure that the refrigeration circuit is not damaged to prevent uncontrolled escape of the refrigerant it contains (data on type plate) and oil.
▶ Disable the appliance.
▶ Pull out the plug.
▶ Cut through the connecting cable.

Liebherr-Hausgeräte Ochsenhausen GmbH
Memminger Straße 77-79
88416 Ochsenhausen
Deutschland

home.liebherr.com