Accessory Specifications

VB-H652LVE

Heater Unit (HU652-VB)

The exterior size, specifications, external materials, are as follows.

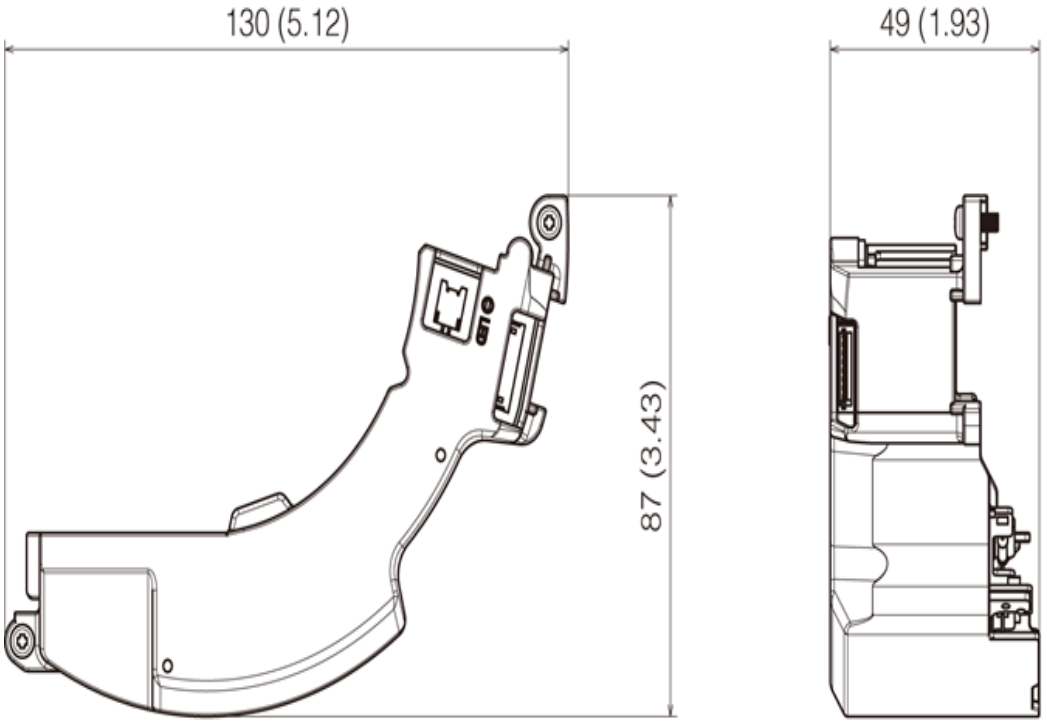

Unit: mm (in.)

Specification

Dimensions		(H x W x D) 130 x 87 x 49 mm (5.12 x 3.43 x 1.93 in.)
Weight		Approx. 60 g (2.2 oz.)
Operating Environme	Temperature	Same as camera
	Humidity	Same as camera
Storage Environment	Temperature	Same as camera
	Humidity	Same as camera

Exterior Materials

	Component Name	Material Abbreviation
(1)	COVER	Polycarbonate resin (PC)
External Color		Black (resin color)