KMR721000B

EN **User Manual**
Microwave Oven

# USER MANUAL

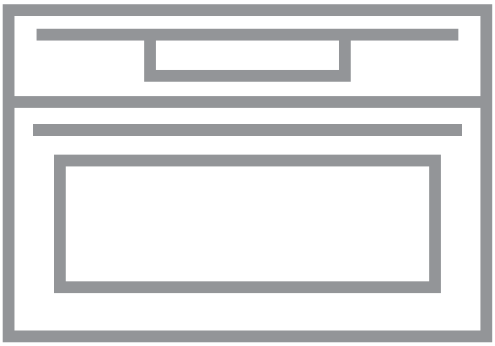

AEG

# CONTENTS

**1.** SAFETY INFORMATION....3
**2.** SAFETY INSTRUCTIONS....5
**3.** PRODUCT DESCRIPTION....8
**4.** CONTROL PANEL....9
**5.** BEFORE FIRST USE....11
**6.** DAILY USE....11
**7.** MICROWAVE MODE....13
**8.** CLOCK FUNCTIONS....17
**9.** AUTOMATIC PROGRAMMES....18
**10.** USING THE ACCESSORIES....19
**11.** ADDITIONAL FUNCTIONS....20
**12.** HINTS AND TIPS....21
**13.** CARE AND CLEANING....28
**14.** TROUBLESHOOTING....29
**15.** TECHNICAL DATA....30
**16.** ENERGY EFFICIENCY....30

# FOR PERFECT RESULTS

Thank you for choosing this AEG product. We have created it to give you impeccable performance for many years, with innovative technologies that help make life simpler features you might not find on ordinary appliances. Please spend a few minutes reading to get the very best from it.
Visit our website for:



Get usage advice, brochures, trouble shooter, service information:
**www.aeg.com/webselfservice**



Register your product for better service:
**www.registeraeg.com**



Buy Accessories, Consumables and Original spare parts for your appliance:
**www.aeg.com/shop**

# CUSTOMER CARE AND SERVICE

Always use original spare parts.
When contacting our Authorised Service Centre, ensure that you have the following data available: Model, PNC, Serial Number.
The information can be found on the rating plate.

⚠ Warning / Caution-Safety information

ⓘ General information and tips

Environmental information

Subject to change without notice.

# 1. ⚠ SAFETY INFORMATION

Before the installation and use of the appliance, carefully read the supplied instructions. The manufacturer is not responsible for any injuries or damages that are the result of incorrect installation or usage. Always keep the instructions in a safe and accessible location for future reference.

## 1.1 Children and vulnerable people safety

- This appliance can be used by children aged from 8 years and above and persons with reduced physical, sensory or mental capabilities or lack of experience and knowledge if they have been given supervision or instruction concerning the use of the appliance in a safe way and understand the hazards involved.
- Do not let children play with the appliance.
- Keep all packaging away from children and dispose of it appropriately.
- Keep children and pets away from the appliance when it operates or when it cools down. Accessible parts are hot.
- If the appliance has a child safety device, this should be activated.
- Children shall not carry out cleaning and user maintenance of the appliance without supervision.
- Children aged 3 years and under must be kept away from this appliance when it is in operation at all times.

## 1.2 General Safety

- Only a qualified person must install this appliance and replace the cable.
- WARNING: The appliance and its accessible parts become hot during use. Care should be taken to avoid touching heating elements. Children less than 8 years of age shall be kept away unless continuously supervised.

- Always use oven gloves to remove or put in accessories or ovenware.
- Before carrying out any maintenance, disconnect the appliance from the power supply.
- Ensure that the appliance is switched off before replacing the lamp to avoid the possibility of electric shock.
- Do not use a steam cleaner to clean the appliance.
- Do not use harsh abrasive cleaners or sharp metal scrapers to clean the glass door since they can scratch the surface, which may result in shattering of the glass.
- If the mains power supply cable is damaged, it must be replaced by the manufacturer, its Authorised Service Centre or similarly qualified persons to avoid an electrical hazard.
- Do not activate the appliance when it is empty. Metal parts inside the cavity can create electric arcing.
- Metallic containers for food and beverages are not allowed during microwave cooking. This requirement is not applicable if the manufacturer specifies size and shape of metallic containers suitable for microwave cooking.
- If the door or door seals are damaged, the appliance must not be operated until it has been repaired by a qualified person.
- Only a qualified person can carry out any service or repair operation that involves the removal of a cover which gives protection against exposure to microwave energy.
- Do not heat liquids and other foods in sealed containers. They are liable to explode.
- Only use utensils that are suitable for use in microwave ovens.
- When heating food in plastic or paper containers, keep an eye on the appliance due to the possibility of ignition.
- The appliance is intended for heating food and beverages. Drying of food or clothing and heating of

warming pads, slippers, sponges, damp cloth and similar may lead to risk of injury, ignition or fire.
- If smoke is emitted, switch off or unplug the appliance and keep the door closed in order to stifle any flames.
- Microwave heating of beverages can result in delayed eruptive boiling. Care must be taken when handling the container.
- The contents of feeding bottles and baby food jars shall be stirred or shaken and the temperature checked before consumption, in order to avoid burns.
- Eggs in their shell and whole hard-boiled eggs should not be heated in the appliance since they may explode, even after microwave heating has ended.
- The appliance should be cleaned regularly and any food deposits removed.
- Failure to maintain the appliance in a clean condition could lead to deterioration of the surface that could adversely affect the life of the appliance and possibly result in a hazardous situation.

# 2. SAFETY INSTRUCTIONS

## 2.1 Installation

**WARNING!**
Only a qualified person must install this appliance.

- Remove all the packaging.
- Do not install or use a damaged appliance.
- Follow the installation instruction supplied with the appliance.
- Always take care when moving the appliance as it is heavy. Always use safety gloves and enclosed footwear.
- Do not pull the appliance by the handle.
- Keep the minimum distance from the other appliances and units.
- Make sure that the appliance is installed below and adjacent safe structures.
- The sides of the appliance must stay adjacent to appliances or to units with the same height.
- The appliance is equipped with an electric cooling system. It must be operated with the electric power supply.

## 2.2 Electrical connection

**WARNING!**
Risk of fire and electrical shock.

- All electrical connections should be made by a qualified electrician.
- The appliance must be earthed.
- Make sure that the parameters on the rating plate are compatible with the electrical ratings of the mains power supply.
- Always use a correctly installed shockproof socket.
- Do not use multi-plug adapters and extension cables.
- Make sure not to cause damage to the mains plug and to the mains cable. Should the mains cable need

to be replaced, this must be carried out by our Authorised Service Centre.
- Do not let mains cables touch or come near the appliance door, especially when the door is hot.
- The shock protection of live and insulated parts must be fastened in such a way that it cannot be removed without tools.
- Connect the mains plug to the mains socket only at the end of the installation. Make sure that there is access to the mains plug after the installation.
- If the mains socket is loose, do not connect the mains plug.
- Do not pull the mains cable to disconnect the appliance. Always pull the mains plug.
- Use only correct isolation devices: line protecting cut-outs, fuses (screw type fuses removed from the holder), earth leakage trips and contactors.
- The electrical installation must have an isolation device which lets you disconnect the appliance from the mains at all poles. The isolation device must have a contact opening width of minimum 3 mm.
- This appliance complies with the E.E.C. Directives.

## 2.3 Use

**WARNING!**
Risk of injury, burns and electrical shock or explosion.

- This appliance is for household use only.
- Do not change the specification of this appliance.
- Make sure that the ventilation openings are not blocked.
- Do not let the appliance stay unattended during operation.
- Deactivate the appliance after each use.
- Be careful when you open the appliance door while the appliance is in operation. Hot air can release.
- Do not operate the appliance with wet hands or when it has contact with water.
- Do not apply pressure on the open door.
- Do not use the appliance as a work surface or as a storage surface.
- Open the appliance door carefully. The use of ingredients with alcohol can cause a mixture of alcohol and air.
- Do not let sparks or open flames to come in contact with the appliance when you open the door.
- Do not put flammable products or items that are wet with flammable products in, near or on the appliance.
- Do not use microwave function to preheat the oven.

**WARNING!**
Risk of damage to the appliance.

- To prevent damage or discoloration to the enamel:
  - do not put aluminium foil directly on the bottom of cavity of the appliance.
  - do not put water directly into the hot appliance.
  - do not keep moist dishes and food in the appliance after you finish the cooking.
  - be careful when you remove or install the accessories.
- Discoloration of the enamel or stainless steel has no effect on the performance of the appliance.
- Use a deep pan for moist cakes. Fruit juices cause stains that can be permanent.
- This appliance is for cooking purposes only. It must not be used for other purposes, for example room heating.
- Always cook with the oven door closed.
- If the appliance is installed behind a furniture panel (e.g. a door) make sure the door is never closed when the appliance is in operation. Heat and moisture can build up behind a closed furniture panel and cause subsequent damage to the appliance, the housing unit or the floor. Do not close the furniture panel until the appliance has cooled down completely after use.

## 2.4 Care and cleaning

**WARNING!**
Risk of injury, fire, or damage to the appliance.

- Before maintenance, deactivate the appliance and disconnect the mains plug from the mains socket.
- Make sure the appliance is cold. There is the risk that the glass panels can break.
- Replace immediately the door glass panels when they are damaged. Contact the Authorised Service Centre.
- Make sure the cavity and the door are wiped dry after each use. Steam produced during the operation of the appliance condensates on cavity walls and can cause corrosion.
- Clean regularly the appliance to prevent the deterioration of the surface material.
- Fat and food remaining in the appliance can cause fire and electric arcing when the microwave function operates.
- Clean the appliance with a moist soft cloth. Only use neutral detergents. Do not use any abrasive products, abrasive cleaning pads, solvents or metal objects.
- If you use an oven spray, follow the safety instruction on it's packaging.
- Do not clean the catalytic enamel (if applicable) with any kind of detergent.

## 2.5 Internal light

- The type of light bulb or halogen lamp used for this appliance is only for household appliances. Do not use it for house lighting.

**WARNING!**
Risk of electrical shock.

- Before replacing the lamp, disconnect the appliance from the power supply.
- Only use lamps with the same specifications.

## 2.6 Disposal

**WARNING!**
Risk of injury or suffocation.

- Disconnect the appliance from the mains supply.
- Cut off the mains electrical cable close to the appliance and dispose of it.
- Remove the door catch to prevent children or pets from becoming trapped in the appliance.

## 2.7 Service

- To repair the appliance contact an Authorised Service Centre.
- Use original spare parts only.

# 3. PRODUCT DESCRIPTION

## 3.1 General overview

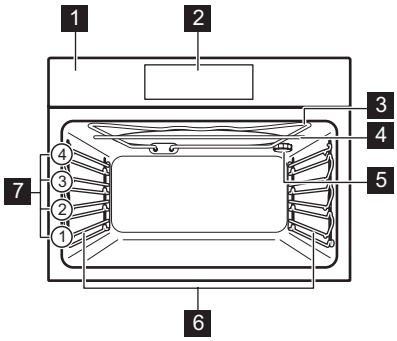


1 Control panel
2 Electronic programmer
3 Heating element
4 Microwave generator
5 Lamp
6 Shelf support, removable
7 Shelf positions

## 3.2 Accessories

**Wire shelf**

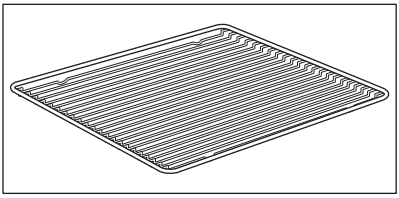

For cookware, cake tins, roasts.

**Baking tray**

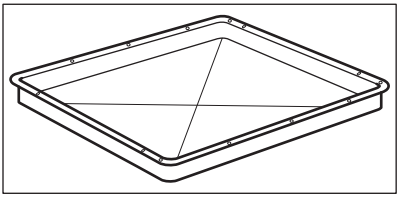

For cakes and biscuits.

**Grill- / Roasting pan**

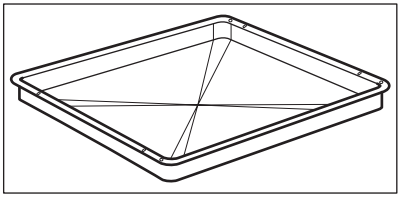

To bake and roast or as a pan to collect fat.

# 4. CONTROL PANEL

## 4.1 Electronic programmer

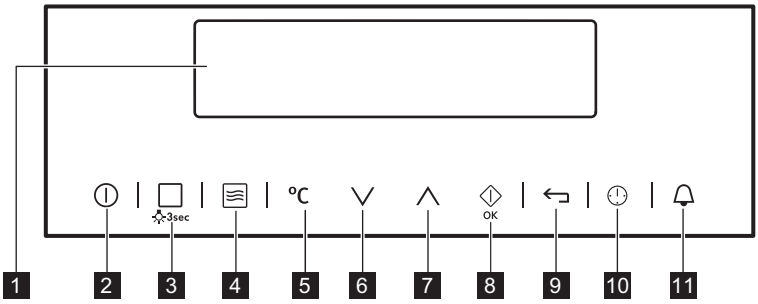


Use the sensor fields to operate the appliance.

| | Sensor field | Function | Comment |
|---|---|---|---|
| 1 | - | Display | Shows the current settings of the appliance. |
| 2 | | ON / OFF | To activate and deactivate the appliance. |
| 3 | 3sec | Grilling or Assisted Cooking | Touch the sensor field once to choose a heating function or the menu: Assisted Cooking. Touch the sensor field again to switch between the functions: Grilling, Assisted Cooking. To activate or deactivate the light, touch the field for 3 seconds. |
| 4 | | Microwave function | To activate the Microwave function. You can use it when the appliance is deactivated. When you use the Microwave function with the function: Duration for more than 7 minutes and in Combi mode, the Microwave power cannot be more than 600 W. |
| 5 | °C | Temperature selection | To set the temperature or show the current temperature in the appliance. |
| 6 | | Down key | To move down in the menu. |
| 7 | | Up key | To move up in the menu. |
| 8 | OK | OK / Microwave Quick Start | To confirm the selection or settings. To activate the Microwave function. You can use it when the appliance is deactivated. |
| 9 | | Back key | To go back one level in the menu. To show the main menu, touch the field for 3 seconds. |

| | Sensor field | Function | Comment |
|---|---|---|---|
| 10 | | Time and additional functions | To set different functions. When a heating function operates, touch the sensor field to set the timer or the functions: Function Lock, Favourites, Heat + Hold, Set + Go. |
| 11 | | Minute Minder | To set the function: Minute Minder. |

## 4.2 Display

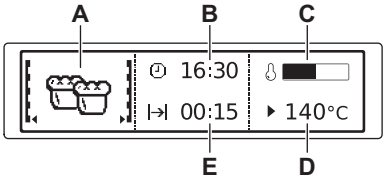


**A.** Heating function or Microwave function
**B.** Time of day
**C.** Heat-up indicator
**D.** Temperature or power of the microwave
**E.** Duration time or end time of a function

Other indicators of the display:

| Symbol | | Function |
|---|---|---|
| | Minute Minder | The function operates. |
| | Time of day | The display shows the current time. |
| | Duration | The display shows the necessary time for cooking. |
| | End Time | The display shows when the cooking time is complete. |
| | Temperature | The display shows the temperature. |
| | Time Indication | The display shows how long the heating function operates. Press ∨ and ∧ at the same time to reset the time. |
| | Heat-up Indicator | The display shows the temperature in the appliance. |
| | Weight Automatic | The display shows that the automatic weight system is active or that weight can be changed. |
| | Heat + Hold | The function is active. |

# 5. BEFORE FIRST USE

**WARNING!**
Refer to Safety chapters.

## 5.1 Initial Cleaning

Remove all accessories and removable shelf supports from the appliance.

Refer to "Care and cleaning" chapter.

Clean the appliance and the accessories before first use.
Put the accessories and the removable shelf supports back to their initial position.

## 5.2 First Connection

When you connect the appliance to the mains or after the power cut, you have to set the language, the display contrast, the display brightness and the time of the day.

1. Press ∧ or ∨ to set the value.
2. Press OK to confirm.

# 6. DAILY USE

**WARNING!**
Refer to Safety chapters.

## 6.1 Navigating the menus

1. Activate the appliance.
2. Press ∨ or ∧ to select the menu option.
3. Press OK to move to the submenu or accept the setting.

At each point you can go back to the main menu with ↩.

## 6.2 The menus in overview

Main menu

| Symbol | Menu item | Application |
|---|---|---|
| | Grilling | A heating function to grill flat food items in the middle of the shelf. To make toast. |
| | Assisted Cooking | Contains a list of automatic programmes. |
| | Basic Settings | Used to set the appliance configuration. |
| | Favourites | Contains a list of favourite cooking programmes created by the user. |

Submenu for: Basic Settings

| Symbol | Submenu | Description |
|---|---|---|
| | Set Time of Day | Sets the current time on the clock. |

| Symbol | Submenu | Description |
|---|---|---|
| | Time Indication | When ON, the display shows the current time when you deactivate the appliance. |
| | Set + Go | To set a function and activate it later with a press of any symbol on the control panel. |
| | Heat + Hold | Keeps the prepared food warm for 30 minutes after a cooking cycle finished. |
| | Time Extension | Activates and deactivates the time extension function. |
| | Display Contrast | Adjusts the display contrast by degrees. |
| | Display Brightness | Adjusts the display brightness by degrees. |
| | Set Language | Sets the language for the display. |
| | Buzzer Volume | Adjusts the volume of press-tones and signals by degrees. |
| | Key Tones | Activates and deactivates the tone of the touch fields. It is not possible to deactivate the tone of the ON / OFF touch field. |
| | Alarm/Error Tones | Activates and deactivates the alarm tones. |
| DEMO | DEMO mode | Activation / deactivation code: 2468 |
| i | Service | Shows the software version and configuration. |
| | Factory Settings | Resets all settings to factory settings. |

## 6.3 Activating a heating function

1. Activate the appliance.
2. Select the function: Grilling.
3. Press OK to confirm.
4. Set the temperature.
5. Press OK to confirm.

## 6.4 Heat-up indicator

When you activate a heating function, the bar on the display comes on. The bar shows that the temperature increases. When temperature is reached the buzzer sounds 3 times and the bar flashes and then disappears.

## 6.5 Residual heat

When you deactivate the appliance, the display shows the residual heat. You can use the heat to keep the food warm.

# 7. MICROWAVE MODE

## 7.1 Microwave

**General:**

**CAUTION!**
Do not let the appliance operate when there is no food in it.

- After you deactivate the appliance, let the food stand for some minutes. Refer to the microwave cooking tables: standing time.
- Remove the aluminium foil packaging, metal containers, etc. before you prepare the food.
- It is not recommended to use more than one level when using the microwave mode.
- Put the food on a plate on the bottom of the cavity if not specified differently.
- If possible, always stir the food before serving.

**Cooking:**

- If possible, cook food covered with material suitable for use in the microwave. Only cook food without a cover if you want to keep a crust.
- Do not overcook the dishes by setting the power and time too high. The food can dry out, burn or catch fire in some places.
- Do not use the appliance to cook eggs in their shells and snails, because they can burst. With fried eggs, pierce the yolks first.
- Pierce skin or peel of potatoes, tomatoes, sausages and similar types of food with a fork several times before cooking so that the food does not burst.
- For chilled or frozen food, set a longer cooking time.
- Dishes which contain sauce must be stirred from time to time.
- Turn larger pieces of food after half the cooking time.
- If possible, cut vegetables into similar-sized pieces.
- Use flat, wide dishes.
- Do not use cookware made of porcelain, ceramic or earthenware with unglazed bottoms or small holes, e.g. on handles . Moisture going into the holes can cause the cookware to crack when it is heated.

**Defrosting meat, poultry, fish:**

- Put the frozen, unwrapped food on a small upturned plate with a container below it, or on a defrosting rack or plastic sieve so that the defrosting liquid can run off.
- Turn the food after half the defrosting time. If possible, divide and then remove the pieces that have started to defrost.

**Defrosting butter, portions of gateau, quark:**

- Do not fully defrost in the appliance, but let them defrost completely at a room temperature. This gives a more even result. Remove all metal or aluminium packaging or parts before defrosting.

**Defrosting fruit, vegetables:**

- If fruit and vegetables should remain raw, do not defrost them fully in the appliance but let them defrost completely at a room temperature.
- To cook fruit and vegetables without defrosting them first, you can use a higher microwave power.

**Ready meals:**

- Ready meals in metal packaging or plastic trays with metal covers can only be defrosted or heated in the microwave if they are expressively designated as suitable for use in the microwave.
- You must follow the manufacturer's instructions printed on the packaging (e.g. remove the metal cover and pierce the plastic film).

## 7.2 Suitable cookware and materials

| Cookware / Material | Microwave | | | Grilling |
|---|---|---|---|---|
| | Defrosting | Heating | Cooking | ♥♥♥♥ |
| Ovenproof glass and porcelain with no metal components, e.g. heat-proof glass | ✓ | ✓ | ✓ | ✓ |
| Non-ovenproof glass and porcelain[1)] | ✓ | X | X | X |
| Glass and glass ceramic made of ovenproof / frost-proof material | ✓ | ✓ | ✓ | ✓ |
| Ceramic[2)], earthenware[2)] | ✓ | ✓ | ✓ | X |
| Heat-resistant plastic up to 200 °C[3)] | ✓ | ✓ | ✓ | X |
| Cardboard, paper | ✓ | X | X | X |
| Clingfilm | ✓ | X | X | X |
| Roasting film with microwave safe closure[3)] | ✓ | ✓ | ✓ | X |
| Roasting dishes made of metal, e.g. enamel, cast iron | X | X | X | ✓ |
| Baking tins, black lacquer or silicon-coated[3)] | X | X | X | ✓ |
| Baking tray | X | X | X | ✓ |
| Wire shelf | X | X | X | ✓ |
| Cookware for microwave use, e.g. crisp pan | X | ✓ | ✓ | X |
| Ready meals in packaging[3)] | ✓ | ✓ | ✓ | ✓ |

1) With no silver, gold, platinum or metal plating / decorations.

2) Without quartz or metal components, or glazes which contain metals

3) You must follow the manufacturer's instructions about the maximum temperatures.

## 7.3 Tips for the microwave

| Result | Remedy |
|---|---|
| You cannot find details for the amount of food prepared. | Find details for similar type of food. Increase or shorten the length of the cooking time according to the following rule: double the amount - almost double the time, half the amount - half the time. |
| The food after cooking is too dry. | Set shorter cooking time or select lower microwave power and cover with material suitable for use in the microwave. |
| The food is still not defrosted, hot or cooked after the end of cooking time . | Set longer cooking time or select higher microwave power. Note that taller dishes generally need longer cooking time. Stir or turn food during cooking. |
| After the end of cooking time the food is overheated at the edges but is still not ready in the middle. | Next time select a lower power and a longer time. Stir liquids, such as soup, halfway through. |

**Other things to think about…**

- Food items have different shapes and qualities. They are prepared in different quantities. Because of this, the necessary time and power for defrosting, heating or cooking can vary. As a rough guide: **double the quantity - almost double the time.**
- The microwave creates the heat directly in the food. Because of this, all places cannot be heated at the same time. You must stir or turn the heated dishes, especially when preparing larger quantities of food.
- The **standing time** is given in the tables. Let the food stand, in the appliance or outside it, so that the heat is distributed more evenly.
- Adjust the power level according to food quantity. Using high power level with small amount of food can burn the food or generate arcing when you use the accessories.
- You get better results for rice if you use flat, wide dishes.

## 7.4 Microwave functions

| Functions | Description |
|---|---|
| Microwave | Creates the heat directly in the food. Use it to heat pre-prepared meals and drinks, to defrost meat or fruit, and to cook vegetables and fish. |
| Combi | Use it to operate the heating function and the microwave mode together. Use it to cook food in a shorter time and brown it simultaneously. |
| Quick Start | Use it to activate the Microwave function with one touch of the symbol OK with the maximum microwave power. Operating time: 30 seconds. |

## 7.5 Setting the Microwave function

1. Activate the appliance.
2. Touch to activate the Microwave function.
3. Touch . The function: Duration is set to 30 seconds and the microwaves starts to operate.

Each touch of adds 30 seconds to the time of the function: Duration.

If you do not touch , the appliance deactivates after 20 seconds.

4. Touch to set the function: Duration. Refer to "Setting the clock functions".

When the time of the function: Duration is longer than 7 minutes the Microwave power is decreased to 600 W.

The maximum setting of the time for the function: Duration is 90 minutes.

You can change the microwave power (touch and then or ) and the function: Duration any time when the Microwave function operates.

5. When the set time ends, an acoustic signal sounds for 2 minutes. The Microwave function deactivates automatically. Touch any symbol to stop the acoustic signal.

To deactivate the Microwave function, touch .

If you touch or open the door, the function stops. To start it again, touch .

## 7.6 Setting the Combi function

1. Activate a heating function. Refer to "Activating a heating function".
2. Touch and do the same steps as when you set the Microwave function.

For some functions the microwave will start as soon as the set temperature is reached.

Functions not available for the Combi function: Favourites, End Time, Set + Go, Heat + Hold.

## 7.7 Setting the Quick Start function

1. If necessary, touch to deactivate the appliance.
2. Touch to activate the Quick Start function.

Each touch of adds 30 seconds to the Duration time.

You can change the microwave power (refer to "Setting the Microwave function").

3. Touch to set the time for the function: Duration. Refer to "Setting the clock functions".

## 7.8 Examples of cooking applications for power settings

The data in the table is for guidance only.

| Power setting | Use |
|---|---|
| • 1000 Watt<br>• 900 Watt<br>• 800 Watt<br>• 700 Watt | Heating liquids<br>Searing at the start of the cooking process<br>Cooking vegetables<br>Melting gelatine and butter |
| • 600 Watt<br>• 500 Watt | Defrosting and heating frozen meals<br>Heating one-plate meals<br>Simmering stews<br>Cooking egg dishes |
| • 400 Watt<br>• 300 Watt<br>• 200 Watt | Continuing to cook meals<br>Cooking delicate food<br>Heating baby food<br>Simmering rice<br>Heating delicate food<br>Melting cheese |
| • 100 Watt | Defrosting meat, fish, bread<br>Defrosting cheese, cream, butter<br>Defrosting fruit and cakes (gateaux)<br>Raising yeast dough<br>Heating up cold dishes and drinks |

# 8. CLOCK FUNCTIONS

## 8.1 Clock functions table

| Clock function | | Application |
|---|---|---|
| | Minute Minder | To set a countdown (max. 2 h 30 min). This function has no effect on the operation of the appliance. You can also activate it when the appliance is deactivated.<br>Use to activate the function. Press or to set the minutes and to start. |
| \|→\| | Duration | To set the length of an operation (max. 23 h 59 min). |
| →\| | End Time | To set the switch-off time for a heating function (max. 23 h 59 min). |

If you set the time for a clock function, the time starts to count down after 5 seconds.

If you use the clock functions: Duration, End Time, the appliance deactivates the heating elements after 90 % of the set time. The appliance uses the residual heat to continue the cooking process until the time ends (3 - 20 minutes).

## 8.2 Setting the clock functions

Before you use the functions: Duration, End Time, you must set a heating function and temperature first. The appliance deactivates automatically. You can use the functions: Duration and End Time at the same time if you want to automatically activate and deactivate the appliance on a given time later.

1. Set a heating function.
2. Press again and again until the display shows the necessary clock function and the related symbol.
3. Press or to set the necessary time.
4. Press to confirm.

When the time ends, an acoustic signal sounds. The appliance deactivates. The display shows a message.

5. Press any symbol to stop the signal.

## 8.3 Heat + Hold

Conditions for the function:

- The set temperature is more than 80 °C.
- The function: Duration is set.

The function: Heat + Hold keeps prepared food warm at 80 °C for 30 minutes. It activates after the baking or roasting procedure ends.

You can activate or deactivate the function in the menu: Basic Settings.

1. Activate the appliance.
2. Select the heating function.
3. Set the temperature above 80 °C.
4. Press again and again until the display shows: Heat + Hold.
5. Press to confirm.

When the function ends, an acoustic signal sounds.
The function stays on if you change the heating functions.

## 8.4 Time Extension

The function: Time Extension makes the heating function continue after the end of Duration.

Applicable to all heating functions with Duration or Weight Automatic.

1. When the cooking time ends, an acoustic signal sounds. Press any symbol.

The display shows the message.

2. Press to activate or to cancel.
3. Set the length of the function.
4. Press .

# 9. AUTOMATIC PROGRAMMES

**WARNING!**
Refer to Safety chapters.

## 9.1 Recipes online

You can find the recipes for the automatic programmes specified for this appliance on our website. To find the proper Recipe Book check the PNC number on the rating plate on the front frame of the appliance cavity.

### 9.2 Assisted Cooking with Recipe Automatic

This appliance has a set of recipes you can use. The recipes are fixed and you cannot change them.

1. Activate the appliance.
2. Select the menu: Assisted Cooking. Press OK to confirm.
3. Select the category and dish. Press OK to confirm.
4. Select a recipe. Press OK to confirm.

When you use the function: Manual, the appliance uses the automatic settings. You can change them as with other functions.

### 9.3 Assisted Cooking with Weight Automatic

This function automatically calculates the roasting time. To use it, it is necessary to input the food weight.

1. Activate the appliance.
2. Select the menu: Assisted Cooking. Press OK to confirm.
3. Select the category and dish. Press OK to confirm.
4. Touch ∧ or ∨ to set the food weight. Press OK to confirm.

The automatic programme starts.

5. You can change the weight at any time. Press ∧ or ∨ to change the weight.
6. When the time ends, an acoustic signal sounds. Press any symbol to deactivate the signal.

With some programmes turn over the food after 30 minutes. The display shows a reminder.

## 10. USING THE ACCESSORIES

**WARNING!**
Refer to Safety chapters.

### 10.1 Inserting the accessories

Use only suitable cookware and material.

**WARNING!**
Refer to "Microwave mode" chapter.

Wire shelf:

Push the shelf between the guide bars of the shelf support and make sure that the feet point down.

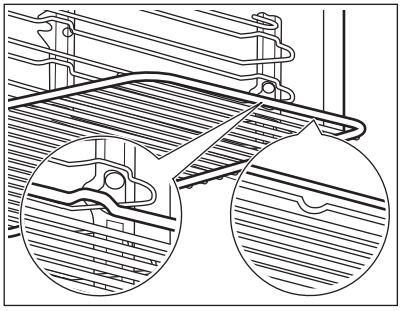

Baking tray / Deep pan:

Push the baking tray / deep pan between the guide bars of the shelf support.

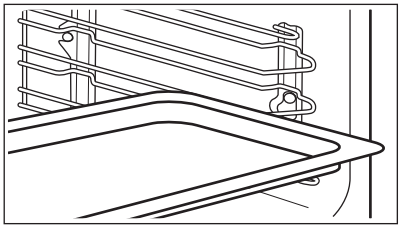

Wire shelf and baking tray / deep pan together:

Push the baking tray / deep pan between the guide bars of the shelf support and the wire shelf on the guide bars above.

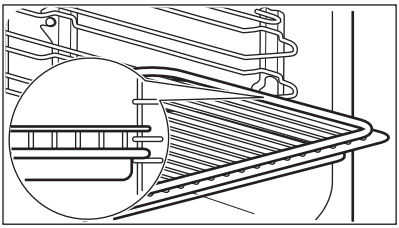

Small indentation at the top increase safety. The indentations are also anti-tip devices. The high rim around the shelf prevents cookware from slipping of the shelf.

# 11. ADDITIONAL FUNCTIONS

## 11.1 Favourites

You can save your favourite settings, such as duration, temperature or heating function. They are available in the menu: Favourites. You can save 20 programmes.

You cannot save Microwave and microwave combi functions as favourite programmes.

### Saving a programme

1. Activate the appliance.
2. Set a heating function or an automatic programme.
3. Touch ◴ again and again until the display shows: SAVE.
4. Press OK to confirm.

The display shows the first free memory position.

5. Press OK to confirm.
6. Enter the name of the programme.

The first letter flashes.

7. Touch ∨ or ∧ to change the letter.
8. Press OK.

The next letter flashes.

9. Do step 7 again as necessary.
10. Press and hold OK to save.

You can overwrite a memory position. When the display shows the first free memory position, touch ∨ or ∧ and press OK to overwrite an existing programme.

You can change the name of a programme in the menu: Edit Programme Name.

### Activating the programme

1. Activate the appliance.
2. Select the menu: Favourites.
3. Press OK to confirm.
4. Select your favourite programme name.
5. Press OK to confirm.

## 11.2 Using the Child Lock

When the Child Lock is on, the appliance cannot be activated accidentally.

1. Touch ⏻ to activate the display.
2. Touch ◴ and ≋ at the same time until the display shows a message.

To deactivate the Child Lock function repeat step 2.

## 11.3 Function Lock

This function prevents an accidental change of the heating function. You can activate it only when the appliance operates.

1. Activate the appliance.
2. Set a heating function or setting.

3. Press ⏲ again and again until the display shows: Function Lock.
4. Press OK to confirm.

To deactivate the function, press ⏲. The display shows a message. Press ⏲ again and then OK to confirm.

When you deactivate the appliance, the function also deactivates.

## 11.4 Set + Go

The function lets you set a heating function (or a programme) and use it later with one press of any symbol.

1. Activate the appliance.
2. Set a heating function.
3. Press ⏲ again and again until the display shows: Duration.
4. Set the time.
5. Press ⏲ again and again until the display shows: Set + Go.
6. Press OK to confirm.

Press any symbol (except for ⏻) to start the function: Set + Go. The set heating function starts.

When the heating function ends, an acoustic signal sounds.

- Function Lock is on when the heating function operates.
- The menu: Basic Settings lets you activate and deactivate the function: Set + Go.

## 11.5 Automatic Switch-off

For safety reasons the appliance turns off automatically after some time if a heating function operates and you do not change any settings.

| Temperature (°C) | Switch-off time (h) |
|---|---|
| 30 - 115 | 12.5 |
| 120 - 195 | 8.5 |
| 200 - 230 | 5.5 |

The Automatic switch-off does not work with the functions: Light, Duration, End Time.

## 11.6 Brightness of the display

There are two modes of display brightness:

- Night brightness - when the appliance is deactivated, the brightness of the display is lower between 10 PM and 6 AM.
- Day brightness:
  - when the appliance is activated.
  - if you touch a symbol during the night brightness (apart from ON / OFF), the display goes back to the day brightness mode for the next 10 seconds.
  - if the appliance is deactivated and you set the function: Minute Minder. When the function ends, the display goes back to the night brightness.

## 11.7 Cooling fan

When the appliance operates, the cooling fan activates automatically to keep the surfaces of the appliance cool. If you deactivate the appliance, the cooling fan can continue to operate until the appliance cools down.

# 12. HINTS AND TIPS

**WARNING!**
Refer to Safety chapters.

The temperature and baking times in the tables are guidelines only. They depend on the recipes and the quality and quantity of the ingredients used.

## 12.1 Grilling

- Always grill with the maximum temperature setting.
- Set the shelf into the shelf position as recommended in the grilling table.
- Always set the pan to collect the fat into the first shelf position.
- Grill only flat pieces of meat or fish.
- Always preheat the empty oven with the grill functions for 5 minutes.

**CAUTION!**
Always grill with the oven door closed.

Grilling

| Food | Temperature (°C) | Time (min) | | Shelf position |
|---|---|---|---|---|
| | | 1st side | 2nd side | |
| Roast beef, medium | 210 - 230 | 30 - 40 | 30 - 40 | 1 |
| Filet of beef, medium | 230 | 20 - 30 | 20 - 30 | 1 |
| Back of pork | 210 - 230 | 30 - 40 | 30 - 40 | 1 |
| Back of veal | 210 - 230 | 30 - 40 | 30 - 40 | 1 |
| Back of lamb | 210 - 230 | 25 - 35 | 20 - 35 | 1 |
| Whole Fish, 500 - 1000 g | 210 - 230 | 15 - 30 | 15 - 30 | 1 |

## 12.2 Microwave cooking

Place your food on the plate or in a container on the cavity bottom if not specified differently.

Defrosting meat

| Food | Power (Watts) | Quantity (kg) | Time (min) | Standing time (min) | Comments |
|---|---|---|---|---|---|
| Whole cuts of meat | 200 | 0.5 | 10 - 12 | 10 - 15 | Turn halfway through. |
| Steak | 200 | 0.2 | 3 - 5 | 5 - 10 | Turn halfway through, remove defrosted parts. |
| Mixed minced meat | 200 | 0.5 | 10 - 15 | 10 - 15 | Turn halfway through, remove defrosted parts. |

| Food | Power (Watts) | Quantity (kg) | Time (min) | Standing time (min) | Comments |
|---|---|---|---|---|---|
| Goulash | 200 | 0.5 | 10 - 15 | 10 - 15 | Turn halfway through, remove defrosted parts. |

Defrosting poultry

| Food | Power (Watts) | Quantity (kg) | Time (min) | Standing time (min) | Comments |
|---|---|---|---|---|---|
| Chicken | 200 | 1 | 25 - 30 | 10 - 20 | Turn halfway through, cover defrosted parts with aluminium foil. |
| Chicken breast | 200 | 0.1 - 0.2 | 3 - 5 | 10 - 15 | Turn halfway through, cover defrosted parts with aluminium foil. |
| Chicken thighs | 200 | 0.1 - 0.2 | 3 - 5 | 10 - 15 | Turn halfway through, cover defrosted parts with aluminium foil. |
| Duck | 200 | 2 | 45 - 60 | 20 - 30 | Turn halfway through, cover defrosted parts with aluminium foil. |

Defrosting fish

| Food | Power (Watts) | Quantity (kg) | Time (min) | Standing time (min) | Comments |
|---|---|---|---|---|---|
| Whole Fish | 100 | 0.5 | 10 - 15 | 15 - 20 | Turn halfway through. |
| Fish fillets | 100 | 0.5 | 10 - 12 | 15 - 20 | Turn halfway through. |

Defrosting sausage

| Food | Power (Watts) | Quantity (kg) | Time (min) | Standing time (min) | Comments |
|---|---|---|---|---|---|
| Sliced sausage | 100 | 0.1 | 2 - 4 | 20 - 40 | Turn halfway through. |

Defrosting dairy products

| Food | Power (Watts) | Quantity (kg) | Time (min) | Standing time (min) | Comments |
|---|---|---|---|---|---|
| Quark | 100 | 0.25 | 10 - 15 | 25 - 30 | Remove aluminium parts, turn halfway through. |
| Butter | 100 | 0.25 | 3 - 5 | 15 - 20 | Remove aluminium parts, turn halfway through. |
| Cheese | 100 | 0.25 | 3 - 5 | 30 - 60 | Remove aluminium parts, turn halfway through. |
| Cream | 100 | 0.2 | 7 - 12 | 20 - 30 | Remove aluminium top, stir halfway through. |

Defrosting cakes / pastries

| Food | Power (Watts) | Quantity | Time (min) | Standing time (min) | Comments |
|---|---|---|---|---|---|
| Yeast dough | 100 | 1 piece | 2 - 3 | 15 - 20 | Turn plate halfway through. |
| Cheesecake | 100 | 1 piece | 2 - 4 | 15 - 20 | Turn plate halfway through. |
| Cake (gateau) | 100 | 1 piece | 1 - 2 | 15 - 20 | Turn plate halfway through. |
| Dry cake (e. g. Pound cake) | 100 | 1 piece | 2 - 4 | 15 - 20 | Turn plate halfway through. |
| Fruit cake | 100 | 1 piece | 1 - 2 | 15 - 20 | Turn plate halfway through. |

| Food | Power (Watts) | Quantity | Time (min) | Standing time (min) | Comments |
|---|---|---|---|---|---|
| Bread | 100 | 1 kg | 15 - 20 | 10 - 15 | Turn halfway through. |
| Sliced bread | 100 | 0.5 kg | 8 - 12 | 10 - 15 | Turn halfway through. |
| Bread rolls | 100 | 4 rolls | 5 - 8 | 5 - 10 | Turn halfway through. |

Defrosting fruit

| Food | Power (Watts) | Quantity (kg) | Time (min) | Standing time (min) | Comments |
|---|---|---|---|---|---|
| Strawberries | 100 | 0.3 | 8 - 12 | 10 - 15 | Defrost covered, stir halfway through. |
| Plums, cherries, raspberries, blackcurrants, apricots | 100 | 0.25 | 8 - 10 | 10 - 15 | Defrost covered, stir halfway through. |

Cooking / melting

| Food | Power (Watts) | Quantity (kg) | Time (min) | Standing time (min) | Comments |
|---|---|---|---|---|---|
| Chocolate / Chocolate coating | 600 | 0.15 | 2 - 3 | - | Stir halfway through. |
| Butter | 200 | 0.1 | 2 - 4 | - | Stir halfway through. |

Defrosting heating

| Food | Power (Watts) | Quantity | Time (min) | Standing time (min) | Comments |
|---|---|---|---|---|---|
| Baby food in jars | 300 | 0.2 kg | 2 - 3 | - | Stir halfway through, check temperature. |
| Baby milk (bottle, 180 ml) | 1000 | 0.2 kg | 0:20 - 0:40 | - | Put spoon into bottle, stir and check temperature. |

| Food | Power (Watts) | Quantity | Time (min) | Standing time (min) | Comments |
|---|---|---|---|---|---|
| Convenience food | 600 | 0.4 - 0.5 kg | 14 - 20 | 5 | Remove any aluminium lids, turn halfway through. |
| Frozen ready meals | 400 | 0.4 - 0.5 kg | 4 - 6 | 5 | Remove any aluminium lids, turn halfway through. |
| Milk | 1000 | 1 cup approx. 200 ml | 1:15 - 1:45 | - | Put spoon in the container. |
| Water | 1000 | 1 cup approx. 200 ml | 1:30 - 2 | - | Put spoon in the container. |
| Sauce | 600 | 200 ml | 1 - 2 | - | Stir halfway through. |
| Soup | 600 | 300 ml | 2 - 4 | - | Stir halfway through. |

Cooking

| Food | Power (Watts) | Quantity | Time (min) | Standing time (min) | Comments |
|---|---|---|---|---|---|
| Whole fish | 500 | 0.5 kg | 8 - 10 | - | Cook covered, turn container several times during cooking. |
| Fish fillets | 500 | 0.5 kg | 6 - 8 | - | Cook covered, turn container several times during cooking. |
| Vegetables, short cooking time, fresh[1)] | 600 | 0.5 kg | 12 - 16 | - | Add approx. 50 ml water, cook covered, stir halfway through. |

| Food | Power (Watts) | Quantity | Time (min) | Standing time (min) | Comments |
|---|---|---|---|---|---|
| Vegetables, short cooking time, frozen[1)] | 600 | 0.5 kg | 14 - 18 | - | Add approx. 50 ml water, cook covered, stir halfway through. |
| Vegetables, long cooking time, fresh[1)] | 600 | 0.5 kg | 14 - 20 | - | Add approx. 50 ml water, cook covered, stir halfway through. |
| Vegetables, long cooking time, frozen[1)] | 600 | 0.5 kg | 18 - 24 | - | Add approx. 50 ml water, cook covered, stir halfway through. |
| Potatoes in their jacket | 1000 | 0.8 kg + 600 ml | 5 - 7 | 300 W / 15 - 20 | Cook covered, stir halfway through. |
| Rice | 1000 | 0.3 kg + 600 ml | 4 - 6 | - | Cook covered, stir halfway through. |
| Popcorn | 1000 | - | 3 - 4 | - | Put the popcorn on a plate on the bottom level. |

1) Cook all vegetables with a cover on the container.

**Combi-function**

- For selected models only.
- Use the functions: Grilling and Microwave.

| Food | Ovenware | Power (Watts) | Temperature (°C) | Time (min) | Shelf position | Comments |
|---|---|---|---|---|---|---|
| 2 chicken halves (2 x 0.55 kg) | Round glass dish, Ø 26 cm | 300 | 220 | 40 | 2 | Turn after 20 min, standing time 5 min. |

| Food | Ovenware | Power (Watts) | Temperature (°C) | Time (min) | Shelf position | Comments |
|---|---|---|---|---|---|---|
| au gratin potatoes (1 kg) | Gratin dish | 300 | 200 | 40 | 2 | 10 min standing time. |
| Roast pork neck (1.1 kg) | Glass dish with strainer | 300 | 200 | 70 | 1 | Turn in between, 10 min standing time. |

# 13. CARE AND CLEANING

**WARNING!**
Refer to Safety chapters.

## 13.1 Notes on cleaning

- Clean the front of the appliance with a soft cloth with warm water and a cleaning agent.
- To clean metal surfaces, use a dedicated cleaning agent.
- Clean the appliance interior after each use. Fat accumulation or other food remains may result in a fire. The risk is higher for the grill pan.
- Clean the cavity roof carefully from food residuals and fat.
- Clean stubborn dirt with a special oven cleaner.
- Clean all accessories after each use and let them dry. Use a soft cloth with warm water and a cleaning agent.
- If you have nonstick accessories, do not clean them using aggressive agents, sharp-edged objects or a dishwasher. It can cause damage to the nonstick coating.
- Dry the oven when the cavity is wet after usage.

## 13.2 Removing the shelf supports

Before maintenance, make sure that the appliance is cool. There is a risk of burns.

To clean the appliance, remove the shelf supports.

1. Pull carefully the supports up and out of the front catch.

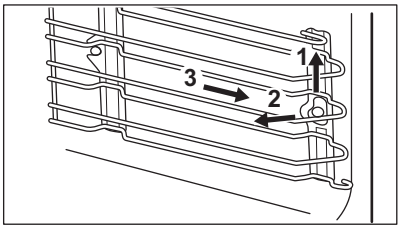


2. Pull the front end of the shelf support away from the side wall.
3. Pull the supports out of the rear catch.

Install the shelf supports in the opposite sequence.

## 13.3 Replacing the lamp

Put a cloth on the bottom of the interior of the appliance. It prevents damage to the lamp glass cover and the cavity.

**WARNING!**
Danger of electrocution!
Disconnect the fuse before you replace the lamp.
The lamp and the lamp glass cover can be hot.

**CAUTION!**
Always hold the halogen lamp with a cloth to prevent grease residue from burning on the lamp.

1. Deactivate the appliance.
2. Remove the fuses from the fuse box or deactivate the circuit breaker.

### The top lamp

1. Turn the lamp glass cover counterclockwise to remove it.
2. Clean the glass cover.
3. Replace the lamp with a suitable 300 °C heat-resistant lamp.
4. Install the glass cover.

# 14. TROUBLESHOOTING

**WARNING!**
Refer to Safety chapters.

## 14.1 What to do if...

| Problem | Possible cause | Remedy |
|---|---|---|
| You cannot activate or operate the oven. | The oven is not connected to an electrical supply or it is connected incorrectly. | Check if the oven is correctly connected to the electrical supply (refer to the connection diagram if available). |
| The oven does not heat up. | The oven is deactivated. | Activate the oven. |
| The oven does not heat up. | The clock is not set. | Set the clock. |
| The oven does not heat up. | The necessary settings are not set. | Make sure that the settings are correct. |
| The oven does not heat up. | The automatic switch-off is activated. | Refer to "Automatic switch-off". |
| The oven does not heat up. | The Child Lock is on. | Refer to "Using the Child Lock". |
| The oven does not heat up. | The door is not closed correctly. | Fully close the door. |
| The oven does not heat up. | The fuse is blown. | Make sure that the fuse is the cause of the malfunction. If the fuse is blown again and again, contact a qualified electrician. |
| The lamp does not operate. | The lamp is defective. | Replace the lamp. |
| The display shows an error code that is not in this table. | There is an electrical fault. | • Deactivate the oven with the house fuse or the safety switch in the fuse box and activate it again.<br>• If the display shows the error code again, contact the Customer Care Department. |

| Problem | Possible cause | Remedy |
|---|---|---|
| Steam and condensation settle on the food and in the cavity of the oven. | You left the dish in the oven for too long. | Do not leave the dishes in the oven for longer than 15 - 20 minutes after the cooking process ends. |
| The appliance is activated and does not heat up. The fan does not operate. The display shows **"Demo"**. | The demo mode is activated. | 1. Deactivate the appliance.<br>2. Touch and hold ⏻ until the appliance activates and deactivates.<br>3. Touch and hold ≋ and 🕘 at the same time until an acoustic signal sounds. **"Demo"** goes out. |

## 14.2 Service data

If you cannot find a solution to the problem yourself, contact your dealer or an Authorised Service Centre.

The necessary data for the service centre is on the rating plate. The rating plate is on the front frame of the appliance cavity. Do not remove the rating plate from the appliance cavity.

| **We recommend that you write the data here:** | |
|---|---|
| Model (MOD.) | ..... |
| Product number (PNC) | ..... |
| Serial number (S.N.) | ..... |

# 15. TECHNICAL DATA

## 15.1 Technical data

| | |
|---|---|
| Voltage | 220 - 240 V |
| Frequency | 50 Hz |

# 16. ENERGY EFFICIENCY

## 16.1 Energy saving

ⓘ The oven contains features which help you save energy during everyday cooking.

**General hints**

Make sure that the oven door is closed properly when the appliance operates. Do not open the door too often during cooking. Keep the door gasket clean and make sure it is well fixed in its position.

Use metal dishes to improve energy saving, but only when you use a non-microwave function.

When possible, do not preheat the oven before you put the food inside.

When the cooking duration is longer than 30 minutes, reduce the oven temperature to minimum 3 - 10 minutes before the end of the cooking time, depending on the duration of the cooking. The residual heat inside the oven will continue to cook.

Use the residual heat to warm up other dishes.

Keep breaks between baking as short as possible when you prepare few dishes at one time.

**Residual heat**
If a programme with the Duration or End Time selection is activated and the cooking time is longer than 30 minutes, the heating elements automatically deactivate earlier in some oven functions.

**Keep food warm**
Choose the lowest possible temperature setting to use residual heat and keep a meal warm. The residual heat indicator or temperature appears on the display.

**Cooking with the lamp off**
Turn off the lamp during cooking. Turn it on only when you need it.

# 17. ENVIRONMENTAL CONCERNS

Recycle the materials with the symbol . Put the packaging in applicable containers to recycle it. Help protect the environment and human health and to recycle waste of electrical and electronic appliances. Do not dispose appliances marked with the symbol with the household waste. Return the product to your local recycling facility or contact your municipal office.

www.aeg.com/shop



867336350-A-142017

CE

AEG