ThinkStation P310 Tower Platform Specifications

Components	Specification
Chipset	Intel C236 Chipset
Intel AMT	Intel Active Management Technology 11 supported on Xeon models
Processor	One LGA1151 socket, supports one the following processors: Xeon E3-1280 v5 – 4C/3.7GHz/8MB/80W/DDR4-2133 Xeon E3-1275 v5 – 4C/3.6GHz/8MB/80W/DDR4-2133 Xeon E3-1270 v5 – 4C/3.6GHz/8MB/80W/DDR4-2133 Xeon E3-1245 v5 – 4C/3.5GHz/8MB/80W/DDR4-2133 Xeon E3-1240 v5 – 4C/3.5GHz/8MB/80W/DDR4-2133 Xeon E3-1230 v5 – 4C/3.4GHz/8MB/80W/DDR4-2133 Xeon E3-1225 v5 – 4C/3.3GHz/8MB/80W/DDR4-2133 Xeon E3-1220 v5 – 4C/3GHz/8MB/80W/DDR4-2133 Core i7-6700 – 4C/3.4GHz/8MB/65W/DDR4-2133 Core i5-6600 – 4C/3.3GHz/6MB/65W/DDR4-2133 Core i5-6500 – 4C/3.2GHz/6MB/65W/DDR4-2133 Core i5-6400 – 4C/2.7GHz/6MB/65W/DDR4-2133 Core i3-6320 – 2C/3.9GHz/4MB/51W/DDR4-2133 Core i3-6300 – 2C/3.8GHz/4MB/51W/DDR4-2133 Core i3-6100 – 2C/3.7GHz/3MB/51W/DDR4-2133
Memory DIMM slots	4 DIMM slots, 2-channel (integrated memory controller in processor)
Memory type/capacity	Up to 64GB ECC/non-ECC (4 x 16GB), DDR4-2133, UDIMM
Intel HD Graphics in processor	Integrated Intel HD P530 in Xeon E3-12x5 v5 processors; or Intel HD 530 in Core i7, i5, or i3 processors. Works along with discrete graphics to support multi-display, enables three display connectors (2 DP, 1 VGA) on rear. Max resolution: 4096 x 2304
Discrete graphics	Two PCI Express 3.0 x16 slots for graphics adapters. Up to two Quadro K1200 on 250 watts models. Or up to two Quadro K2200, or up to one Quadro M4000 on 400 watts models. Supports the following NVIDIA graphics adapters: Adapter / Cores / Memory / Power / Connector NVS 310 / 48 / 1GB / 19.5W / 2xDP NVS 315 / 48 / 1GB / 19.5W / 2xDVI-I SL/2xDP NVS 510 / 192 / 2GB / 33.4W / 4xmini DP Quadro K420 / 192 / 2GB / 41W / 1xDVI-I DL+1xDP Quadro K620 / 384 / 2GB / 45W / 1xDVI-I DL+1xDP Quadro K1200 / 512 / 4GB / 45W / 4xminiDP Quadro K2200 / 640 / 4GB / 68W / 1xDVI-I DL+2xDP Quadro M2000 / 768 / 4GB / 75W / 4xDP Quadro M4000 / 1664 / 8GB / 120W / 4xDP
Onboard drive controller	Five onboard SATA 6.0Gb/s connectors for optical and disk drives plus one SATA connector for optional eSATA. RAID 0, 1, 5, 10 support
Drive Bays	Two external 5.25" bays, two internal 3.5" bays (see right). Up to one 9.5mm optical plus 4 x 3.5" disk drive bays plus one M.2 NVMe SSD
Supporting disk drives	3.5" SATA HDD (7.2K 6Gbs) – 500GB/1TB/2TB/3TB/4TB/6TB/1TB hybrid/2TB hybrid 2.5" SATA SSD (6Gbs) – 128GB/180GB*/240GB*/256GB*/480GB*/512GB*/1TB* M.2 NVMe SSD – 256GB*/512GB*/1TB*, via PCIe 3.0 x4 adapter *** Includes OPAL options*
Max internal storage	16TB (4 x 4TB 3.5" HDDs) plus 512GB M.2 NVMe SSD
Media reader	9-in-1 card reader. Optional 29-in-1 card reader on selected models
Power supply	Supports one of the following: • 250 watts with variable speed fan, autosensing, 85% PSU, Climate Savers Computing Bronze, 80 PLUS Bronze qualified • 400 watts with variable speed fan, autosensing, 92% PSU, Climate Savers Computing Platinum, 80 PLUS Platinum qualified
Onboard Ethernet	One onboard gigabit ethernet, Intel I219LM, supports Wake-on-LAN
HD Audio	Realtek ALC662 codec
TPM	Standard, TCG 1.2-compliant
Front ports	Two USB 3.0, microphone (3.5mm), headphone (3.5mm)
Rear ports	1 VGA and 2 DisplayPort (for Intel HD Graphics models only), two USB 2.0, four USB 3.0 (blue), one serial (9-pin), one ethernet (RJ-45), three analog audio ports (line-in, line-out, mic-in)

Components	Specification
Additional ports	Supports the following optional ports: • Two IEEE 1394 (one on rear and one on front flex module) via PCIe adpater, up to one adapter per system. Supports one of the following per system: • Two rear USB 3.0 per PCIe adapter. • One rear Thunderbolt via PCIe adapter. • One front eSATA (on flex module), or one rear eSATA via cable and PCIe slot bracket, up to one eSATA port per system. • One additional serial port via cable. • One parallel port via cable
Mechanical	• Raven black color; metal case • 6.89"W x 16.77"D x 14.8"H • 175mm W x 426mm D x 376mm H • 28.66 lb (13kg) max configuration • 25-liter
Environmental certifications	GREENGUARD certified/RoHS-compliant/EPEAT Gold rating/ ENERGY STAR 6.1 qualified
Limited warranty	3-year limited onsite service with 9x5/NBD. Some parts are Customer Replaceable Units.

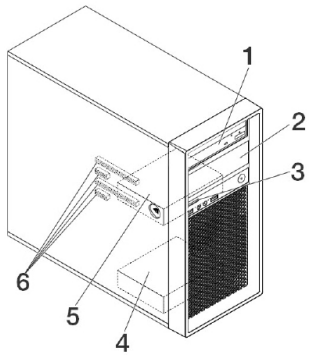

Drive Bays and PCIe Slots

Bay 1 and Bay 2	5.25", support one of the following: HH optical/flex module**/9.5mm optical+3.5" HDD bay/ 3.5" HDD bay/Front Access Storage Enclosure *** Flex module supports one or more of the following: 9.5mm optical/ 29-in-1 reader/front IEEE 1394/front eSATA.* *Up to one flex module is supported per system.*
Bay 3	Optional 9-in-1 single slot reader
Bay 4	Standard 3.5" HDD bay
Bay 5	Standard 3.5" HDD bay
6 -Slots	Four PCIe slots (top-down): Slot 1: Half length, full height, PCIe 3.0 x16 (near CPU) Slot 2: Half length, full height, PCIe 3.0 x1 Slot 3: Half length, full height, PCIe 3.0 x16 (x4 elec) Slot 4: Half length, full height, PCIe 3.0 x1

For the list of ISV certifications, please visit *www.thinkworkstations.com/isv-certifications/*
For a list of all supported options, please visit
https://download.lenovo.com/pccbbs/options_iso/ocm_december_2016.xlsx sheet

© Copyright Lenovo 2017. All rights reserved.

Model	30AT0066++
Product	ThinkStation P310 Tower
Region	EMEA Focus
Machine Type	30AT
TopSeller	TopSeller
Processor	Xeon E3-1245 v5 4C/3.5GHz/8MB/80W/DDR4-2133
Graphics	Intel HD P530
Memory (Capacity/Type)	2x8GB UDIMM DDR4-2133 ECC
Storage (Capacity/Type/Interface)	1x512GB SSD 2.5" SATA6Gbs
Optical	HH DVD±RW
Media Reader	9-in-1
Power Supply	400W 92%
Add-on Ports	None
Discrete Ethernet	None
Chassis Intrusion Switch	Switch
Keyboard / Mouse	USB / USB Optical
Operating System	Windows 10 DG Windows 7 Pro 64
Warranty	3-year
Global	No
Ann Date (mm/yy)	09/16


ThinkStation
ThinkStation


ThinkStation


ThinkStation