在以下网站注册并获得支持
www.philips.com.cn/welcome

BHB868



EN User manual

ZH-CN 用户手册

PHILIPS

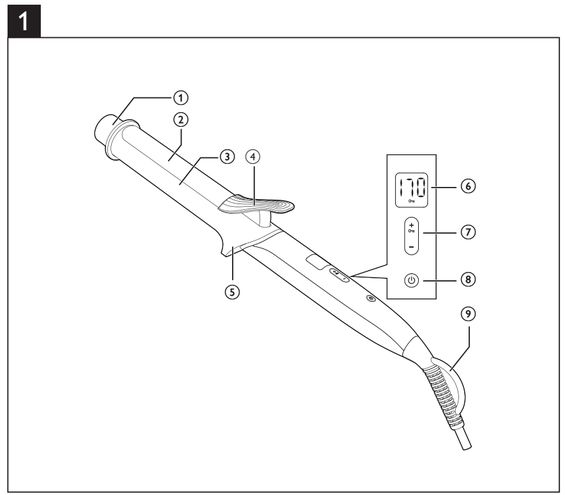

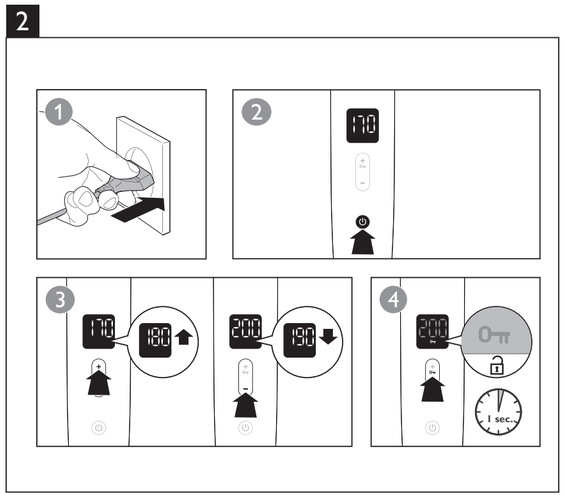

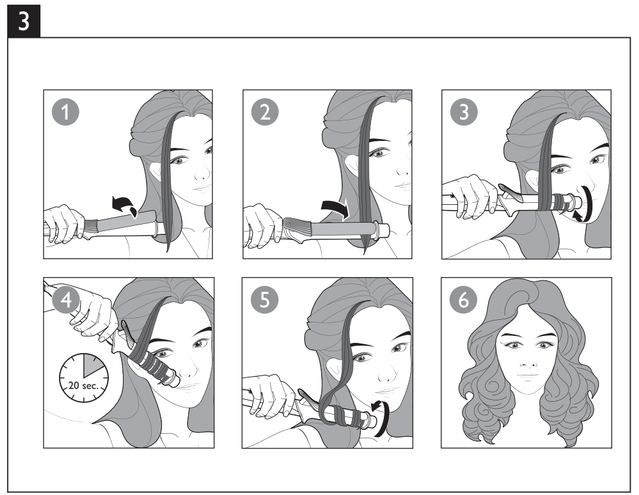

PHILIPS

产品	：	飞利浦美发造型器
型号	：	BHB868
额定电压	：	220V~
额定频率	：	50Hz
额定输入功率	：	65 W
生产日期	：	请见产品本体
产地	：	中国广东中山

飞利浦（中国）投资有限公司
上海市天目西路218号1602-1605
全国顾客服务热线：4008 800 008

本产品根据国标GB4706.1-2005, GB4706.15-2008, GB4343.1-2009及GB17625.1-2012制造

© 2017 Koninklijke Philips N.V.
保留所有权利

3140 035 42912

English

Congratulations on your purchase, and welcome to Philips! To fully benefit from the support that Philips offers, register your product at www.philips.com/welcome.

1 Important

Read this user manual carefully before you use the appliance and keep it for future reference.

- WARNING: Do not use this appliance near water.
- When the appliance is used in a bathroom, unplug it after use since the proximity of water presents a risk, even when the appliance is switched off.
- WARNING: Do not use this appliance near bathtubs, showers, basins or other vessels containing water.
- Always unplug the appliance after use.
- If the main cord is damaged, you must have it replaced by Philips, a service centre authorised by Philips or similarly qualified persons in order to avoid a hazard.
- This appliance can be used by children aged from 8 years and above and persons with reduced physical, sensory or mental capabilities or lack of experience and knowledge if they have been given supervision or instruction concerning use of the appliance in a safe way and understand the hazards involved. Children shall not play with the appliance. Cleaning and user maintenance shall not be made by children without supervision.
- Before you connect the appliance, ensure that the voltage indicated on the appliance corresponds to the local power voltage.
- Do not use the appliance for any other purpose than described in this manual.
- Do not use this appliance on artificial hair.
- When the appliance is connected to the power, never leave it unattended.
- Never use any accessories or parts from other manufacturers or that Philips does not specifically recommend. If you use such accessories or parts, your guarantee becomes invalid.
- Do not wind the main cord round the appliance.
- Wait until the appliance has cooled down before you store it.
- Pay full attention when using the appliance since it could be extremely hot. Only hold the handle as other parts are hot and avoid contact with the skin.
- Always place the appliance with the stand on a heat-resistant, stable flat surface. The hot barrel should never touch the surface or other flammable material.
- Avoid the main cord from coming into contact with the hot parts of the appliance.
- Keep the appliance away from flammable objects and material when it is switched on.
- Never cover the appliance with anything (e.g. a towel or clothing) when it is hot.
- Only use the appliance on dry hair. Do not operate the appliance with wet hands.
- Keep the barrel clean and free of dust and styling products such as mousse, spray and gel.
- The barrel has coating. This coating might slowly wear away over time. However, this does not affect the performance of the appliance.
- If the appliance is used on color-treated hair, the barrel may be stained.
- Always return the appliance to a service centre authorized by Philips for examination or repair. Repair by unqualified people could result in an extremely hazardous situation for the user.
- Do not insert metal objects into openings to avoid electric shock.
- Do not pull on the power cord after using. Always unplug the appliance by holding the plug.

Electromagnetic fields (EMF)

This Philips appliance complies with all applicable standards and regulations regarding exposure to electromagnetic fields.

Environment

Do not throw away the appliance with the normal household waste at the end of its life, but hand it in at an official collection point for recycling. By doing this, you help to preserve the environment.

2 Introduction

The curler with 32 mm barrel helps you easily achieve vivid, bouncy curls and ringlets for joyful and young look. Protective ceramic coating ensures even heat distribution and takes good care of your hair while curling. Top temperature of 200 °C guarantees optimal result while minimizing hair damage. We hope you will enjoy using your curler.

- **Key Lock Function** 🔑

If no buttons pressed for 5 seconds, the Key Lock is activated automatically and key lock icon 🔑 will be displayed (6). The first automatic activation after switching on the appliance is after 15 seconds. To unlock the appliance, press the 🔑 (7) for 1 second.

3 Curl your hair (Fig.3)

1 Connect the plug to a power supply socket.
2 Press and hold the ⏻ button (⑧) for one second to switch on the appliance.
↳ The default temperature setting 170°C is displayed (⑥).
3 Select your desired temperature setting by pressing + or − (⑦) according to the Hair type table below.

Hair type	Temperature settings
Fine	130-150 °C
Normal	160-180 °C
Thick	190-200 °C

4 Before you start to curl, comb and divide your hair into small sections. Press the lever (④) and place a section of hair between the barrel (③) and clip (②).
5 Close the clip by releasing the lever and slide the barrel down to the hair tips.
6 At the hair tips, turn and rotate the curler naturally so that hair is wrapped around the barrel from tip to root.

Tip: You can also use the cool tip (①) as a support when you rotate the curler.

7 Hold the curling iron in position.

Tip: For loose curls, keep the curler in position around 20 seconds and for tighter curls, use up to 25 seconds.

8 Unwind the section of hair until you can open the clip again with the lever.
9 To curl the rest of your hair, repeat steps 4 to 8.

After use:

1 Switch off the appliance and unplug it.
2 Place it on the resting stand (⑤) until it cools down.
3 Remove hair and dust from the barrel and clip.
4 Clean the barrel and the clip with damp cloth.
5 Keep it in a safe and dry place, free of dust. You can also hang it with the hanging loop (⑨).

4 Guarantee & Service

If you need information e.g. about replacement of an attachment or if you have a problem, please visit the Philips website at www.philips.com/support or contact the Philips Customer Care Centre in your country (you will find its phone number in the worldwide guarantee leaflet). If there is no Consumer Care Centre in your country, go to your local Philips dealer.

5 Troubleshooting

Problem	Cause	Solution
The appliance does not work at all.	The power socket to which the appliance has been connected may be broken.	Check the appliance is plugged in correctly. Check the fuse for this power socket in your home.
	The appliance may not be suitable for the voltage to which it has been connected.	Ensure that the voltage indicated on the type plate of the appliance corresponds to the local power voltage.

简体中文

感谢您的惠顾，欢迎光临飞利浦！为了您能充分享受飞利浦提供的支持，请在 www.philips.com.cn/welcome 上注册您的产品。

1 重要事项

使用产品之前，请仔细阅读本用户手册，并妥善保管以供日后参考。

- 警告：请勿在近水处使用本产品。
- 本产品在浴室内使用时，使用后拔下插头，因为即使本产品开关断开后，在近水处仍然存在危险。
- 警告：不要在盛水的浴缸、淋浴、洗脸盆或其他器皿附近使用本器具。
- 警告符号注释：禁止在洗澡或淋浴时使用。
- 使用后务必拔下产品的插头。
- 如果电源线损坏，为避免危险，必须由飞利浦、飞利浦授权的服务中心或类似的专职人员来更换。
- 本产品可由8岁或以上年龄的儿童以及肢体不健全、感觉或精神上有障碍或缺乏相关经验和知识的人士使用，但前提是有人对他们使用本产品进行监督或指导，以确保他们安全使用，并且让他们明白相关的危害。不要让儿童在无人监督的情况下进行清洁和保养。
- 不得让儿童玩耍本产品。
- 连接产品之前，请确保产品上标示的电压与当地电源电压相符。
- 请勿将本产品用于本手册中说明以外的任何其它用途。
- 请勿在假发上使用本产品。
- 当产品连接了电源时，切勿让其无人看管。
- 切勿使用其它制造商生产的或未经飞利浦特别推荐的附件或部件。如果您使用了此类附件或部件，则本产品的保修将会失效。
- 切勿将电源线缠绕在产品上。
- 待产品完全冷却后再存放。
- 由于产品会很烫，请在使用时多加注意。只能握住手柄，因为其他部位会很烫，并且避免与皮肤接触。
- 始终将本产品置于隔热的平稳表面上。热卷发棒不得接触物体表面或其他可燃材料。
- 不要使电源线接触到产品的灼热部分。
- 如果产品已开启，请使产品远离易燃物体和材料。
- 当产品变热时切勿在其表面覆盖任何物品（如毛巾或衣服）。
- 只能在干燥的头发上使用本产品。请勿用湿手操作本产品。
- 保持卷发棒洁净无尘且未粘上定型产品（如摩丝、定型喷剂和发胶）。
- 卷发棒具有涂层。此涂层可能会在多次使用之后慢慢磨损。但这不会影响产品的性能。
- 将产品用于染过色的头发时，卷发棒可能会染上颜色。
- 产品只能送到飞利浦授权的服务中心检修。由不合格人员进行修理可能将用户置于极度危险的境地。
- 切勿将金属物体插入开口中，以免触电。
- 使用后请勿拉扯电源线。拔下产品插头时，请握紧插头。

电磁场 (EMF)

本飞利浦产品符合所有有关暴露于电磁场的适用标准和法规。

环境

弃置产品时，请不要将其与一般生活垃圾堆放在一起，应将其交给政府指定的回收中心。这样做有利于环保。

2 简介

本卷发器配有 32 毫米卷发棒，可帮助您轻松打造动感的弹性卷发和长发卷，让您焕发年轻光彩。保护性陶瓷涂层可确保热量均匀分布，卷发的同时精心呵护您的秀发。200 °C 的最高温度可确保最佳效果，同时将头发的损伤降至最低。我们希望您喜欢使用卷发器。

- **按键锁定功能** 🔑

如果 5 秒钟未按任何按钮，则将自动启用按键锁定功能，并且会显示按键锁定图标 🔑 (⑥)。开启产品后第一次自动锁定激活发生在 15 秒钟之后。要解锁产品，请按 🔑 (⑦) 1 秒钟。

3 卷发（图 3）

1 将插头连接至电源插座。
2 按住 ⏻ 按钮 (⑧) 1 秒钟以开启产品。
↳ 将显示默认温度设定 170° C (⑥)。
3 按照下面的发质类型表，按 + 或 − (⑦) 选择所需的温度设定。

发质类型	温度设定
细发	130-150 °C
普通	160-180 °C
粗发	190-200 °C

4 开始卷发之前，请梳理头发，将头发分成数缕。按下控制杆 (④)，将一缕头发放在卷发棒 (③) 和夹片 (②) 之间。
5 松开控制杆以闭合发夹并将卷发棒滑至发梢。
6 从发梢开始，自然地转动并旋转卷发器，使头发从发梢至发根缠绕在卷发棒上。

提示：您也可以使用不烫手尖端 (①) 辅助您旋转卷发器。

7 使卷发造型器保持在该位置。

提示：打造蓬松卷发时，使卷发器保持在该位置大约 20 秒；打造更紧致的卷发时，使卷发器保持在该位置大约 25 秒。

8 解开发缕，直到可通过控制杆再次打开发夹。
9 要卷起其余头发，请重复步骤 4 至 8。

使用后：

1 关闭产品并拔下电源插头。
2 将其置于搁置架 (⑤) 上，直至其冷却。
3 清除卷发棒和夹片上的头发和灰尘。
4 用湿布清洁卷发棒和夹片。
5 将产品存放在安全、干燥、清洁的位置。您也可以使用挂环 (⑨) 将产品挂起存放。

4 保修与服务

如果您需要了解信息（如更换附件的相关信息）或有任何疑问，请访问飞利浦网站：www.philips.com.cn/support；您也可以联系您所在国家/地区的飞利浦客户服务中心（可从全球保修卡中找到其电话号码）。如果您所在的国家/地区没有飞利浦客户服务中心，请与当地的飞利浦经销商联系。

5 故障排除

问题	原因	解决方法
产品完全无法工作。	产品所连接的电源插座可能已损坏。	检查设备已正确插入。 检查您家中电源插座的保险丝。
	产品连接的电源电压可能与产品电压不符。	确保产品型号铭牌上标示的电压与当地电源电压相符。

保留备用

出版日期：2017-02-21

产品中有害物质的名称及含量							
	有害物质						
部件名称	铅 (Pb)	汞 (Hg)	镉 (Cd)	六价铬 (Cr6+)	多溴联苯 (PBB)	多溴二苯醚 (PBDE)
发热架组合	X	O	O	O	O	O
电源线	X	O	O	O	O	O

本表格依据SJ/T 11364的规定编制。

O：表示该有害物质在该部件所有均质材料中的含量均在GB/T 26572规定的限量要求以下。

X：表示该有害物质至少在该部件的某一均质材料中的含量超出GB/T 26572规定的限量要求。

*该表格中所显示的“有害物质”在产品正常使用情况下不会对人身和环境产生任何伤害。

*该表格中所显示的“有害物质”及其存在的部件向消费者和回收处理从业者提供相关物质的存在信息，有助于产品废弃时的妥善处理。