

A3 MONOCHROME PRINTER FOR BUSY COMPANIES

EPSON ACULASER
M8000N SERIES



All the interfaces you need: Ethernet 10/100 Base Tx, high-speed USB, Parallel ports as standard

Great flexibility in large print runs: supports alternative paper orientation as standard, while options include a stacker, duplex printing, 3 extra A3/A4 paper cassettes.

Fast handling of complex print jobs: thanks to standard 128Mb memory, expandable to 578 Mb.

Switch between media: in seconds, the paper cassettes can be extended from A4 to accept A3

Our top-performing mono laser

The Epson Aculaser M8000N Series is the fastest Epson printer, producing an incredible 44 ppm in A4 and up to 23 ppm in A3. It features a high resolution of 1200x1200 dpi with genuine Adobe® PostScript® 3™ and PDF direct print for faster, more accurate processing, this is ideal for services and workgroups that need very high-volume, high quality output.

High productivity, low TCO

Built for durability, this affordable printer incorporates many long-life components so that you can print thousands of pages without any problem. The Return Imaging Cartridge further contributes to the low running costs and makes this printer an extremely cost-effective solution.

Advanced security

With built-in SSL data encryption for network use, the Epson Aculaser M8000N goes even further to protect your work. It also provides an anti-copy function to distinguish copies from an original, and an optional CF card for setting up confidential jobs. The optional EpsonNet Authentication print solution can be installed to ensure that printouts go only to their intended audience.

EPSON®
EXCEED YOUR VISION

PRODUCT DIMENSIONS AND SPECIFICATIONS

PRINT FEATURES	
Printing Technology	Laser
Resolution	True 1200dpi
Print Speed	A4: 44 ppm, A3: 25 ppm
First Page Out	7.8 sec
Warm Up Time	18 sec
Maximum Monthly Volume	200,000 pages
CONTROLLER SPECIFICATIONS	
Processor	500 Mhz
Memory	Standard: 128MB, Max: 576MB
Printer Control Language Emulations	Genuine Adobe® PostScript® 3™, PCL6, PCL5e, PDF1.3, ESC/Page, FX, ESCP2, I239X
Resident Typefaces	**Scalable:** 84 ESC/Page, 95 PCL5c, 80 PCL6, 17 PS3 **Bitmap:** 7 ESC/Page, 5 PCL5c, 1 PCL6 **Typeface:** 10 ESC/P2, 8 FX, 8 I239X
INTERFACES AND CONNECTIVITY	
Standard Interfaces	Ethernet (100Base-TX/10Base-T), USB 2.0HS, Parallel (IEEE 1284).
Optional Interfaces	TypeB and CompactFlash
Network Printing Protocols	**TCP/IP:** LPR, FTP, IPP, PORT2501, PORT9100, WSD **Microsoft Network:** Net BIOS over TCP/IP, Net BIOS over NetBEUI **NetWare:** Operation mode, Standby, NDS Print Server, Bindery Print Server, Remote Printer **AppleTalk**
Network Management Protocols	**TCP/IP:** SNMP, HTTP, TELNET, DHCP, BOOTP, APIPA, PING, DDNS, mDNS, SNTP, SSDP, SLP, WSD, LLTD **Microsoft Network:** Auto-IP, SSDP - **MS Network (NetBEUI):** SNMP - **NetWare:** SNMP - **AppleTalk:** SNMP
Pannel	132x65 dots bitmap LCD, 3LEDs, 7 buttons
MEDIA HANDLING	
Standard Paper Input	650 sheets (150 Multi-Purpose tray + 500-Sheet Paper Cassette)
Maximum Paper Input	2150 sheets (150 Multi-Purpose tray + 500-Sheet Paper + 3x Optional 500-Sheet Paper)
Paper Size	A3, A4, A5, A6, B4, B5, LT, HLT, LGL, GLG, GLT, EXE, B, F4, Transparency, labels, C5, C6, Com10, DL, Mon, ISO-B5, custom: 98.4-508 mm to 75-297 mm
Paper Weight	64 - 216 g / m^2
Optional Paper Handling	500-Sheet Universal Paper Cassette Unit (C12C802542) - Max: 3 Duplex Unit (C12C802552) 500-Sheet A4 Stacker (C12C802562)
Paper Output Standard/Maximum	450 sheets / 900 sheets (with optional Stacker - C12C802562)
POWER REQUIREMENTS	
Norms	International Energy Star®
Rated Voltage/Frequency/Current	220V to 240V / 50Hz or 60Hz / 3.5A
Power Consumption	703 W (Printing), 88 W (Ready), 4 W (Sleep)
SYSTEM REQUIREMENT & OS SUPPORT	
System Requirement	**PC:** Ethernet (100BaseTX/10BaseT), USB (1.1 or higher) or Parallel Port **MAC:** EtherTalk, USB 1.1 or higher, if available
Windows Support	Microsoft Windows 2000 / XP / Server 2003 / Microsoft Windows Vista / Server 2008 / XP x64 Edition / Server 2003 x64 Edition / Vista x64 / 2008 x64 Edition
Mac Support	Mac OS 10.3.9 and up
Linux/Unix/Citrix/SAP/Novel Support	For compatibility details relating to Linux, Unix, Novell, SAP, etc. please refer to http://www.business-solutions.epson.co.uk/Compatible.htm
ADDITIONAL SOFTWARE	
Drivers	Printer Driver, Epson Status Monitor 3, Reference Guide, Paper Jam Guide
Software	Network Utilities, Network Guide
DIMENSIONS AND WEIGHT	
(W x D x H mm, Kg)	AL-M8000N: Main unit: 518x429x390 mm, 22.5Kg 500-Sheet Unit: 505x373x143 mm, 6.3 Kg Duplex Unit: 435x147x233 mm, 2.3 Kg A4 Stacker: 501x312x212 mm, 3.0 Kg
ENVIRONMENTAL CONDITIONS	
Temperature	Operation: 5 to 35°C / Storage: 0 to 35 °C
Humidity	Operation: 15 to 85% RH / Storage: 15 to 80% RH
Sound Power	Operating: 7.44B (A); Standby: 5.3 B (A)
Sound Pressure	Operating: 58 dB (A); Standby: 38 dB (A)
SAFETY AND REGULATIONS	
Safety Standards	Dust: 4.00 mg/h or less, Ozone: 1.50 mg/h or less, Styrene: 1.00 mg/h or less, Benzene: 0.05 mg/h, TVOC: 10.00 mg/h or less, no PVC in Plastics, compliant with EN60825-1, Compliant with EN60950-1
EMC/EMI	EN55022 (CIRSPR Publication 22), Class B, EN61000-3-2, EN61000-3-3, EN55024
Ozone Generation	Compliant with UL 478, 5th edition
WARRANTY	Standard: 1 year onsite Optional: CoverPlus 3 years on-site: ECPGRP55

EPSON ACULASER M8000N SERIES

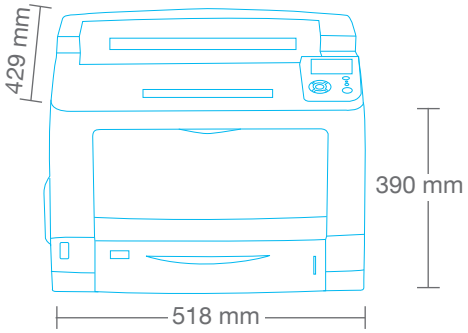

MODEL CONFIGURATION

- Aculaser M8000N — C11CA38011BZ
  main model
- Aculaser M8000TN — C11CA38011BY
  AL-M8000N plus optional 500 sheet paper cassette
- Aculaser M8000DN — C11CA38011BX
  AL-M8000N plus optional Duplex Unit
- Aculaser M8000DTN — 11CA38011BV
  AL-M8000DN plus optional 500 sheet paper cassette
- Aculaser M8000D3TN — C11CA38011BW
  AL-M8000DN plus 3 optional 550 sheet paper cassette

SUPPLIES

- Imaging Cartridge: — C13S051188
  Standard: 15.000 pages (ISO 19752)
  470x242x237 (WxDxH) - 2.7Kg
- Imaging Cartridge: — C13S051189
  Return*: 15.000 pages (ISO 19752)
  470x242x237 (WxDxH) - 2.7Kg
- Double Box Imaging Cartridge: — C13S051189DB
  Return*: 30.000 pages (ISO 19752)
  470x252x474 (WxDxH) - 6.4kg
- Initial Toner: 6.000 pages (ISO 19752)

OPTIONS

- Duplex Unit: — C12C802552
- 500-Sheet Universal Paper Cassette Unit — C12C802542
- A4 Stacker: — C12C802562
- Extra memory
  64MB RAM: — 7000275
  128MB RAM: — 7000276
  256MB RAM: — 7000277

*Return toner cartridges provide customers with a lower priced toner cartridge on the agreement that the empty cartridge will be returned via Epson's free toner collection programme. Toner cartridge return is available only in countries where Epson collection is available. For more information, please visit http://www.epson.com/recycle/

Better Products for a Better Future™

At Epson, we know that planning for the future requires a strong commitment to the environment. That is why we strive to create innovative products that are reliable, recyclable, and energy efficient. Better products that use fewer resources help ensure a better future for us all.

For further information please contact your local Epson office or visit www.epson-europe.com

Austria 0810/20 01 13 (0,07 €/Min.) **Belgium** 070/350120 (0.1735 €/min.) **Czech** 800/142 052 **Denmark** 44 50 85 85 **Finland** 0201 552 091 **France** 09 74 75 04 04 (0,12 €/min) **Germany** 01805/23 41 10 (0,14 €/Min.) **Greece** 210-8099499 **Hungary** 06800 147 83 **Ireland** 01 436 7742 **Italy** 02-660321 10 (0,12 €/min.) **Luxemburg** 900/43010 (0,24 €/min.) **Middle East** +9714 8818934 **Netherlands** 0900-5050808 (0.05 €/oproep + 0.15 €/min.) **Norway** 22 06 42 80 **Poland** 0-0-800 4911299 (0,16 zl/min.) **Portugal** 707 222 111 **Russia** (095) 777-03-55 **Slovakia** 0850 111 429 **South Africa** (+2711) 465 9621 **Spain** 93 582 15 00 **Sweden** 0771-400135 (Mobilsamtal – 0,99 kr/min, Lokala samtal – 0,30 kr/min, Utlandssamtal – 0,89 kr/min) **Switzerland** 0848 448820 (4-8 cent./min.) **Turkey** (0212) 3360303 **United Kingdom** 0871 222 6702

Trademarks and registered trademarks are the property of Seiko Epson® Corporation or their respective owners.
Product information is subject to change without prior notice.

EPSON ALM8000 EN_INT 02/09