ISLT 65 AS X

12NC: F103817

GTIN (EAN) code: 8050147038178



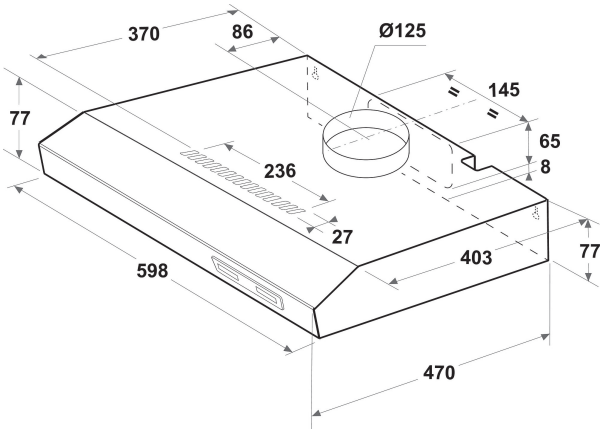

MAIN FEATURES

Product group	Hood
Colour body	Inox
Material body	Stainless steel
Colour chimney	N/A
Material chimney	-
Typology	Built-in/Built-under
Installation type	Free-standing
Type of control	Mechanical
Type of control settings	-
Decor panel options	-
Motor location	Integrated motor in hood body
Operating Mode	Convertible
Electrical connection rating (W)	108
Current (A)	0,5
Voltage (V)	220-240
Frequency (Hz)	50/60
Length of Electrical Supply Cord (cm)	150
Plug type	No
Chimney height (mm)	0
Height of product, without chimney (mm)	0
Height of the product	77
Width of the product	598
Depth of the product	470
Minimum niche height	0
Minimum niche width	0
Niche depth	0
Net weight (kg)	4.6

TECHNICAL FEATURES

Type of manual control devices	Slider
Type of automatic control devices	-
Number of motors	1
Total power of the motors (W)	80
Number of speed settings: boost option availability	3
Boost presence	No
Maximum output air extraction (m^3/h)	165
Boost position air extraction (m^3/h)	0
Maximum output recirculating air (m^3/h)	65
Boost position output recirculating (m^3/h)	0
Light Control Type	On/Off
Number of lights	1
Type of lamps used	Halogen
Total power of the lamps (W)	30
Diameter of air outlet (mm)	120
No-return airflow flap	No
Grease filter material	Not washable synthetic
Odour filter	Yes

PERFORMANCES

Sound power at min. speed (2010/30/EU)	52
Sound power at max. speed (2010/30/EU)	64
Noise level with boost position (dB(A) re 1 pW)	0