MWI 3213 IX UK

12NC: F102697

GTIN (EAN) code: 8050147026977



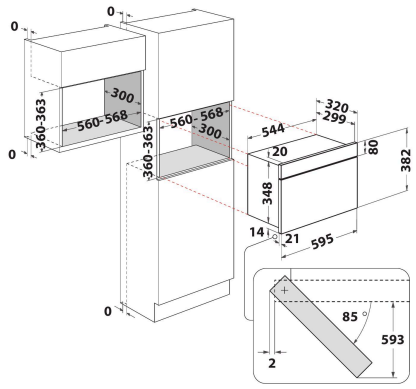

MAIN FEATURES

Product group	Microwave
Commercial code	MWI 3213 IX UK
Main colour of product	Inox
Type of micro-wave oven	MW+Grill function
Construction type	Built-in
Type of control	Electronic
Type of control settings	LED
Additional cooking method Grill	Yes
Crisp	No
Steam	No
Additional cooking method Fan cooking	No
Clock	Yes
Automatic programmes	No
Height of the product	382
Width of the product	595
Depth of the product	320
Minimum niche height	360
Minimum niche width	556
Niche depth	300
Net weight (kg)	21
Cavity capacity (l)	22
Turntable	Yes
Turntable diameter (mm)	250
Integrated Cleaning system	No

TECHNICAL FEATURES

Current (A)	10
Voltage (V)	230
Frequency (Hz)	50
Length of Electrical Supply Cord (cm)	135
Plug type	UK
Timer	Yes
Grill power (W)	700
Type of grill	Quartz
Cavity material	Painted
Interior light	Yes
Additional cooking method Grill	Yes
Position of interior lights of the cavity	Right side

PERFORMANCES

6th Sense / Dynamic Intelligence	No
Number of power levels	4
Maximum micro-wave power (W)	750
Bread defrost	No
Jet defrost	Yes
Jet start	Yes