WSLK 66 AS X

12NC: 857840122010

GTIN (EAN) code: 8003437206559

Whirlpool
SENSING THE DIFFERENCE



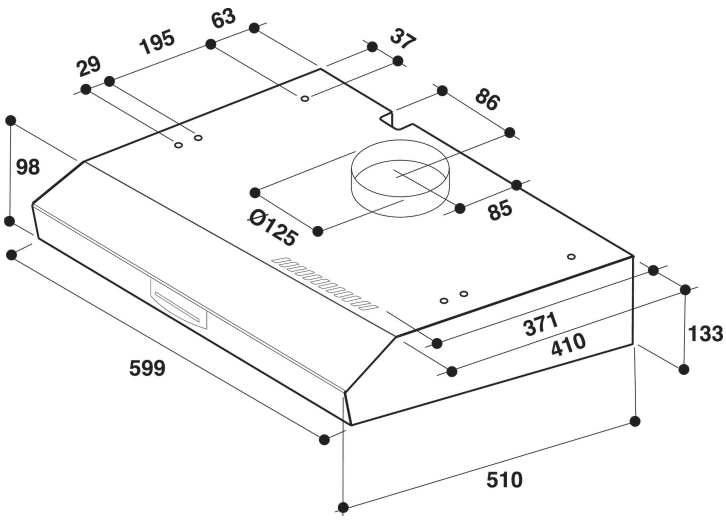

- Maximum noise level 67 dBA
- Noise Level (min. - max.): 54-67 dBA
- Air Flow (min. - max.): 95, 240 m3/h
- Maximum extraction rate: 240 (m3/h)
- Energy class E
- 3 speed settings
- 1 Halogen, 28 W lamp
- 1 x 115 W motor
- Mechanical Slider
- 1 Washable aluminium filter
- Grease Filtering Efficiency Class: E
- Lighting Efficiency Class: G
- Fluid Dynamic Efficiency Class: F
- Operating Mode: Air extraction, Recirculating air
- Inox Finishing
- 1 Motor
- Motor Power: 115 W

Whirlpool wall mounted cooker hood - WSLK 66 AS X

This Whirlpool wall mounted Cooker Hood features: dishwasher-safe, washable aluminium grease filters. An outstanding cooker extractor fan, ensuring a fresh, grease-free cooking environment. Less than 60cm wide appliance. New design ensuring extra silent performance.

Flexible Installation
Flexible installation options. This Whirlpool Hood can be operated in either Ducted or Recirculated mode (filter needed), so you can enjoy complete freedom when designing your kitchen.

Mechanical control
Effortless control. This Whirlpool Hood includes an analogue control interface designed for simplicity and ease-of-use.

Mechanical Slider
Effortless control. This Whirlpool Hood features a slider controller, providing effortless control of your appliance.

3 Speeds
Versatile performance. This Whirlpool Hood offers 3 speed options, giving you complete control over the extraction rate.

Wall-mounted installation
Wall-mounted installation. This wall-mounted Whirlpool Hood is a breeze to install.

Total annual energy consumption
Ideal performance, outstanding savings. Whirlpool Hoods are designed to provide exceptional results, while reducing energy costs.

Halogen Lamps
Halogen lamps generate 3 times more light than normal lamps, so you can always see what's cooking.

Energy class E
This is an Energy Class E appliance.

WSLK 66 AS X

12NC: 857840122010

GTIN (EAN) code: 8003437206559

Whirlpool
SENSING THE DIFFERENCE

MAIN FEATURES

Product group	Hood
Colour body	Inox
Material body	Stainless steel
Colour chimney	N/A
Material chimney	N/A
Typology	Wall-mounted
Installation type	Wall-mounted
Type of control	Mechanical
Type of control settings	-
Decor panel options	N/A
Motor location	Integrated motor in hood body
Operating Mode	Convertible
Electrical connection rating (W)	143
Current (A)	0,6
Voltage (V)	220-240
Frequency (Hz)	50/60
Length of Electrical Supply Cord (cm)	150
Plug type	Europlug
Chimney height (mm)	0-0
Height of product, without chimney (mm)	133
Height of the product	133
Width of the product	598
Depth of the product	510
Minimum niche height	0
Minimum niche width	0
Niche depth	0
Net weight (kg)	5

TECHNICAL FEATURES

Type of manual control devices	Slider
Type of automatic control devices	-
Number of motors	1
Total power of the motors (W)	115
Number of speed settings: boost option availability	3
Boost presence	No
Maximum output air extraction (m³/h)	240
Boost position air extraction (m³/h)	0
Maximum output recirculating air (m³/h)	75
Boost position output recirculating (m³/h)	0
Light Control Type	Steps
Number of lights	1
Type of lamps used	Halogen
Total power of the lamps (W)	28
Diameter of air outlet (mm)	125
No-return airflow flap	No
Grease filter material	Washable aluminium
Odour filter	No

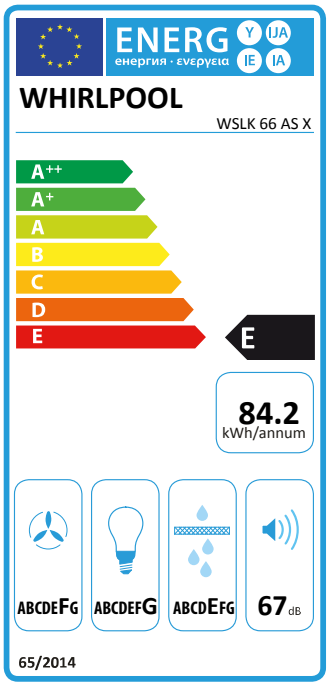

PERFORMANCES

Sound power at min. speed (2010/30/EU)	54
Sound power at max. speed (2010/30/EU)	67
Noise level with boost position (dB(A) re 1 pW)	0