

GB **User and maintenance manual**

Whirlpool

IMPORTANT SAFETY INSTRUCTIONS

These instructions shall also be available on website: docs.whirlpool.eu.

YOUR SAFETY AND THAT OF OTHERS IS VERY IMPORTANT

This manual and the appliance itself provide important safety warnings, to be read and observed at all times.

⚠ This is the attention symbol, pertaining to safety, which alerts users to potential risks to themselves and others.

All safety warnings are preceded by the attention symbol and the following terms:

⚠ DANGER: **indicates a hazardous situation which, if not avoided, will cause serious injury.**

⚠ WARNING: **indicates a hazardous situation which, if not avoided, could cause serious injury.**

All safety warnings specify the potential danger/warning to which they refer and indicate how to reduce the risk of injury, damage and electrical shock resulting from incorrect use of the appliance. Comply with the following instructions::

- Installation or maintenance must be carried out by a specialized technician, in compliance with the manufacturer's instructions and local safety regulations. Do not repair or replace any part of the appliance unless specifically requested in the user manual.
- The appliance must be disconnected from the power supply before carrying out any installation work.
- Earthing of the appliance is compulsory. (Not necessary for class II hoods identified by the ⧈ symbol on the specifications label).
- The power supply cable must be long enough to permit connecting the appliance to the mains socket outlet.
- Do not pull the power supply cable in order to unplug the appliance.
- The electrical components must no longer be accessible to the user after installation.
- Do not touch the appliance with any wet part of the body and do not operate it when barefoot.
- This appliance may be used by children older than 8 years of age and by persons with reduced physical, sensory or mental capacities or with inadequate experience and knowledge only if they are supervised or if they have been taught how to use the appliance in conditions of safety and if they are aware of the dangers involved. Children must not play with the appliance. Cleaning and maintenance must not be carried out by children, unless they are supervised by adults.
- Do not repair or replace any part of the appliance unless specifically indicated in the manual. Defective parts must be replaced using genuine parts. All other maintenance services must be carried out by a specialized technician.
- Children must be supervised to ensure they do not play with the appliance.
- When drilling through a wall or the ceiling, pay attention not to damage electric connections and/or pipes.
- The ventilation ducts must always discharge to the outside.
- Exhaust air must not be vented through a flue used for removal of fumes produced by appliances burning gas or other fuels, but must have a separate outlet. All national regulations governing extraction of fumes must be observed.

- If the hood is used together with other appliances operating on gas or other fuels, the negative pressure in the room must not exceed 4 Pa (4 x 10-5 bar). For this reason, make sure the room is adequately ventilated.
- The Manufacturer declines any liability for improper use or incorrect setting of the controls.
- Regular cleaning and maintenance is essential to correct functioning and good performance of the appliance. Frequently clean all encrustations from dirty surfaces to prevent the accumulation of grease. Regularly clean or replace the filters.
- Never flame cook food (flambé) under the appliance. Using free flames might cause fire.
- Do not leave frying pans unattended when frying, as the frying oil may catch fire.
- Failure to observe the instructions for cleaning the hood and replacing the filters may result in a fire.
- The fume extractor hood must never be opened without the grease filters installed and it should be kept under constant supervision.
- Gas appliances must be used under the extractor hood only with pans resting.
- When using more than three gas cooking points, the hood should be operating at power level 2 or greater. This will eliminate heat congestion in the appliance.
- Before touching the bulbs, first ensure that they are cold.
- Do not use or leave the hood without its lamps correctly installed - risk of electric shock.
- Wear work gloves for all installation and maintenance operations.
- TThe product is not suitable for outdoor use.
- When the hob is in use, accessible parts of the hood may become hot.
- For lamp replacement use only lamp type indicated in the Maintenance/Replacing lamps section of this manual.

KEEP THIS BOOKLET FOR FUTURE CONSULTATION.

Declaration of Conformity CE

- This appliance has been designed, manufactured and marketed in compliance with:
  - safety objectives of the "Low Voltage" Directive 2014/35/EU;
  - the ecodesign requirements of european regulations n. 66/2014, n. 327/2011, n. 244/2009, n. 245/2009, n. 1194/2012, n. 2015/1428;
  - the protection requirements of Directive "EMC" 2014/30/EU.

Electrical safety of the appliance can only be guaranteed if it is correctly connected to an approved earthing system.

Energy saving tips

- Switch ON the hood at minimum speed when you start cooking and kept it running for few minutes after cooking is finished.
- Increase the speed only in case of large amount of smoke and vapour and use boost speed(s) only in extreme situations.
- Replace the charcoal filter(s) when necessary to maintain a good odour reduction efficiency.
- Clean the grease filter(s) when necessary to maintain a good grease filter efficiency.
- Use the maximum diameter of the ducting system indicated in this manual to optimize efficiency and minimize noise.

INSTALLATION

After unpacking the appliance, check for any transport damage. In the event of problems, contact the dealer or your nearest After-sales Service. To prevent any damage, only remove the appliance from its polystyrene foam packaging at the time of installation.

PREPARING FOR INSTALLATION

⚠ WARNING: this is a heavy product; the hood should only be lifted and installed by two or more people.

The minimum distance between the support of the cooking pans on top of the cooker and the bottom of the hood must not be less than 60 cm for electric cookers and 75 cm for gas or mixed cookers. Before installation also check the minimum distances stated in the manual of the cooker.
If the installation instructions for the cooker specify a greater distance between cooker and hood, this distance must be observed.

ELECTRICAL CONNECTION

Make sure the power voltage specified on the appliance rating plate is the same as the mains voltage.
This information may be found on the inside of the hood, under the grease filter.
Power cable replacement (type H05 VV-F 3 x 0,75 mm^2) must be carried out by a qualified electrician. Contact an authorized service centre.
If the hood is fitted with an electric plug, connect the plug to a socket complying with current regulations, located in an accessible place after installation. If no plug is fitted (direct wiring to the mains), or if the socket is not located in an accessible place, install a standardised double pole power switch that will enable complete isolation from the mains in case of category III overvoltage conditions, in accordance with installation rules.
If the cable is not fitted with a plug, connect the wires according to the following table:

Mains voltage and frequency	Wire connection
220-240 V 50-60 Hz	⏚ : yellow/green **N** : blue **L** : brown

GENERAL RECOMMENDATIONS

Before use

Remove cardboard protection pieces, protective film and adhesive labels from accessories. Check the appliance for any transport damage.
Use only the fixing screws supplied with the product for installation or, if not supplied, purchase the correct screws type. Use the correct length for the screws which are identified in the Installation Guide.
In case of doubt, consult an authorised service assistance centre or similar qualified person.

The hood can look different to that illustrated in the drawings in this booklet. The instructions for use, maintenance and installation, however, remain the same.

! Do not carry out electrical or mechanical variations on the product or on the discharge conduits.

During use

To avoid any damage do not place any weights on the appliance. Do not expose the appliance to atmospheric agents.

SAFEGUARDING THE ENVIRONMENT

Disposal of packing

The packing material is 100% recyclable and is marked with the recycle symbol ♺. The various parts of the packing must therefore be disposed of responsibly and in full compliance with local authority regulations governing waste disposal.

Scrapping the product

- This appliance is marked in compliance with European Directive 2012/19/EU, Waste Electrical and Electronic Equipment (WEEE).
- By ensuring this product is disposed of correctly, you will help prevent potential negative consequences for the environment and human health, which could otherwise be caused by inappropriate waste handling of this product.
- The symbol  on the product or on the accompanying documentation indicates that it should not be treated as domestic waste but must be taken to an appropriate collection centre for the recycling of electrical and electronic equipment.

Scrapping of household appliances

- This appliance is manufactured with recyclable or reusable materials. Dispose of it in accordance with local waste disposal regulations. Before scrapping, cut off the power supply cable.
- For further information on the treatment, recovery and recycling of household electrical appliances, contact your competent local authority, the collection service for household waste or the store where you purchased the appliance.

TROUBLESHOOTING GUIDE

The appliance does not work:
- Check for the presence of mains electrical power and if the appliance is connected to the electrical supply;
- Turn off the appliance and restart it to see if the fault persists.

The hood's suction level is not sufficient:
- Check the suction speed and adjust as necessary;
- Check that the filters are clean;
- Check the air vents for any obstructions.

The light does not work:
- Check the light bulb and replace if necessary
- Check that the light bulb has been correctly fitted;

AFTER-SALES SERVICE

Before calling the After-sales Service:
1. See if you can solve the problem yourself with the help of the suggestions given in the "Troubleshooting guide".
2. Switch the appliance off and back on again it to see if the fault persists.

If after the above checks the fault still occurs, get in touch with the nearest After-sales Service.
Always specify:
- A brief description of the fault;
- The exact type and model of the appliance;
- The service number (number after the word "Service" on the rating plate), located on the inside of the appliance. The service number is also indicated on the guarantee booklet;
- Your full address;
- Your telephone number.

SERVICE 0000 000 00000

If any repairs are required, please contact an authorised After-sales Service (to guarantee that original spare parts will be used and repairs carried out correctly).

CLEANING

⚠ WARNING: **- Never use steam cleaning equipment.**
- Disconnect the appliance from the power supply

IMPORTANT: do not use corrosive or abrasive detergents. If any of these products accidentally comes into contact with the appliance, clean immediately with a damp cloth.

- Clean the surfaces with a damp cloth. If it is very dirty, add a few drops of washing up detergent to the water. Finish off with a dry cloth.

IMPORTANT: do not use abrasive sponges or metallic scrapers or scourers. Over time, these can ruin the enamel surface.

- Use detergents specifically designed for cleaning the appliance and follow the manufacturer instructions

IMPORTANT: clean the filters at least monthly to remove any oil or grease residuals.

INSTALLATION - FITTING INSTRUCTIONS

Extractor hood installation (A): fumes are extracted and expelled to the outside through an exhaust duct fixed to the flange **C** (bayonet coupling). Always shut off the unused exhaust outlet with the plug **D1** provided (if provided- bayonet coupling).
Important: some models are supplied with the upper hole **B1** closed with a plug **D1**. Remove the plug to enable use.
Important! Not all models have rear drain hole B2.
Please note: if necessary, remove plastic piece D2 or D3 with the aid of pliers or a box cutter.
The use of a rear exit with this product is PROHIBITED within the European Community member states, the EFTA countries, in Turkey and all countries subject to Commission Delegated Regulation (EU) No. 65/2014 and Commission Regulation (EU) No. 66/2014.
Filter version installation (F): If it is not possible to duct fumes and steam to the outside, the hood can be used in the **filter version** by fitting a carbon filter/s (not supplied). In this way, fumes and steam are recycled through the front grille section positioned above the control panel.
Check the position of the **extraction/filter selector** (inside the hood) **G**.
Fixing to the wall - Place the hood against the wall (or use the template **H**, if provided) and, using a pencil, mark the holes (3 or 4 Ø 8 mm holes), drill them, insert the rawlplugs **J** in the holes and 2 screws **K** in the top holes. Remove the grille and hang the hood on the 2 screws. Next, from inside, insert the third (and fourth) screws **L** and screw them all down.
Fixing to the wall unit - Position the hood (or use the template **H**, if provided) and, using a pencil, mark the 4 Ø 6 mm holes to be drilled on the bottom of the wall unit.
Fix the hood in place with 4 screws **M** from inside the wall unit.

DESCRIPTION AND USE OF THE HOOD

Control panel
Light: move the switch to the right or press the next button to switch on.
Extraction speed: move the switch to the right or press the next button to increase extraction speed.
Grease filter - can be one of the following types:
Paper filter: must be replaced once a month or, if the top side is coloured, when the colour shows through the holes in the grille.
Metal filter: must be washed once a month by hand or in a dishwasher, using a quick wash cycle with a low temperature.
To access the grease filter **open the grille** using the spring release catches **E1** or **E2** or **E3** and release it from the retainers **R1** or **R2**.
The self-supporting metallic filter has no support grille. To remove it, pull the spring release handles **E1** backwards and remove the filter downwards.
Important! Over time, **the metallic filter** may become opaque; this in no way affects its filtering capacity.
Carbon filter - can be one of the following types:
Shaped V1: Remove the cover **W** by turning the knobs **O** through 90°.
Insert the carbon filter inside the special housing and secure it in place by turning the knob **O** through 90°, then close the cover.
Replace every 4 months.
Rectangular V2: insert the rear edge first **T** and then the front **(U) - replace every 6 months.**
Circular V3: Bayonet coupling. Position the filter in the centre so that it covers the motor-protection grille, make sure that the reference mark **X1** or **X2** or **X3** or **X4** on the carbon filter is aligned with the the reference mark **Y** on the fan shroud, then turn clockwise; to remove, turn anti-clockwise, if provided with a tab **Z** remember to lift it up slightly first.
Replace every 4 months.

Replacing lamps
Remove the filters then remove the burnt-out bulb.

Lamp	Power(W)	Socket	Voltage(V)	Dimension (mm)	ILCOS D Code (according IEC 61231)
	28	E14	230	67 (Light Center Length)	HSGSB/C/UB-28-230-E14-67

Refit the filters.

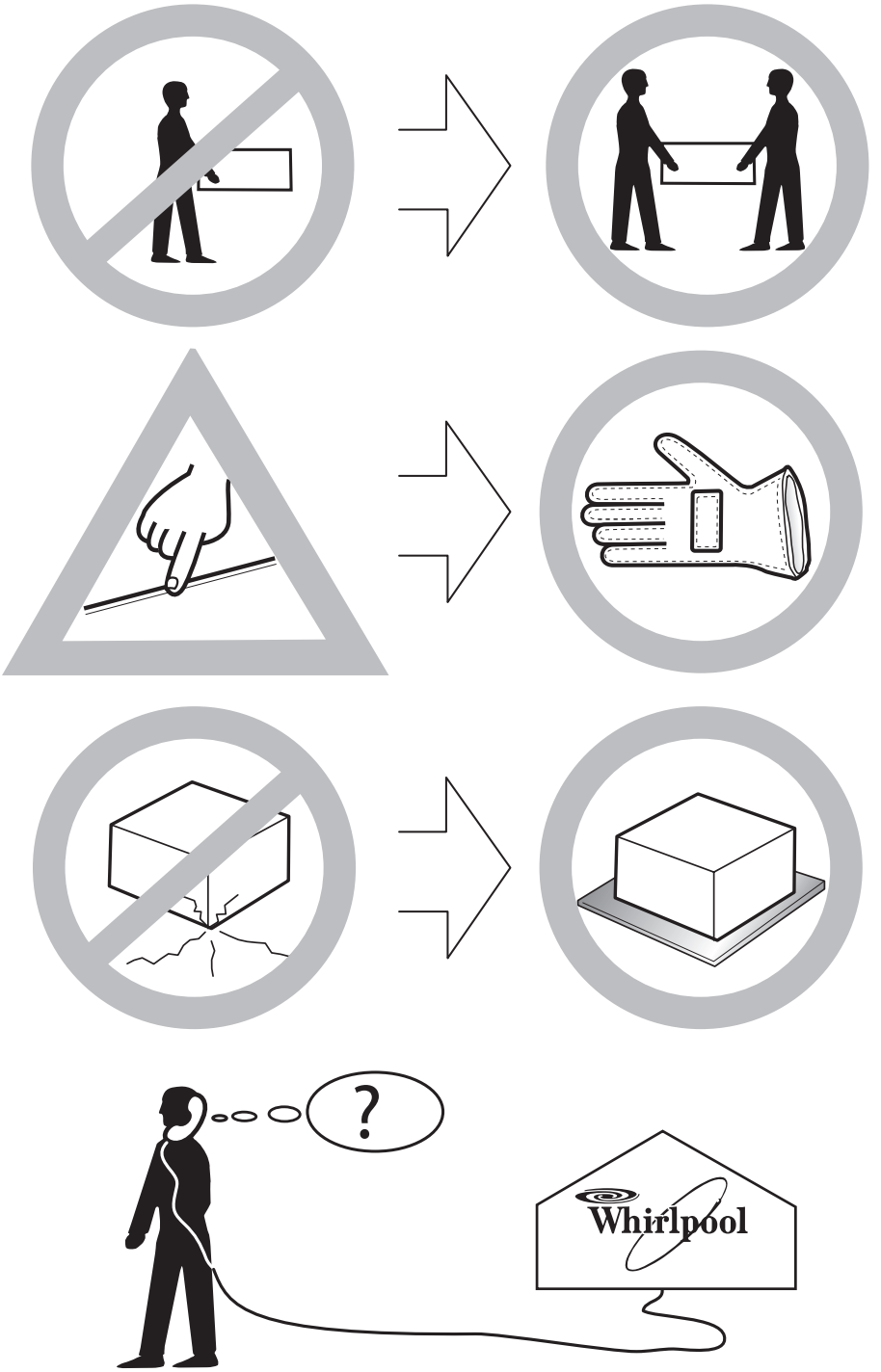
?
Whirlpool

* only present on some models

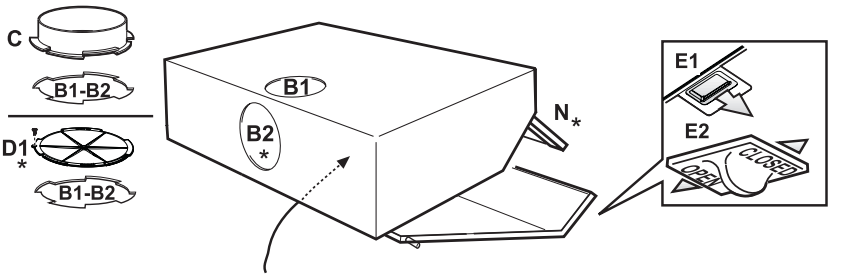

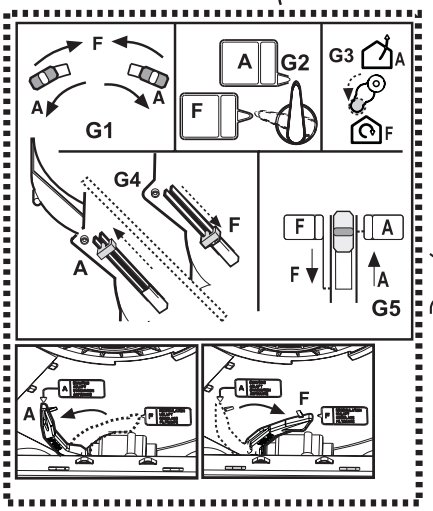

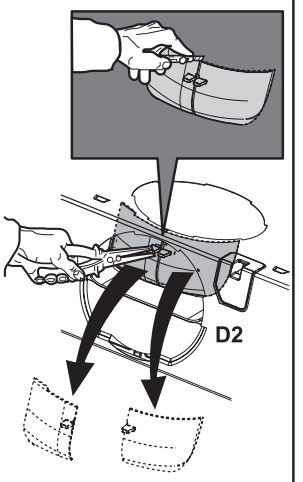

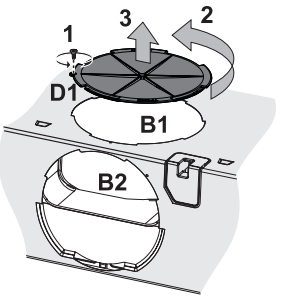

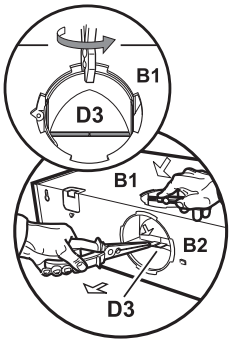

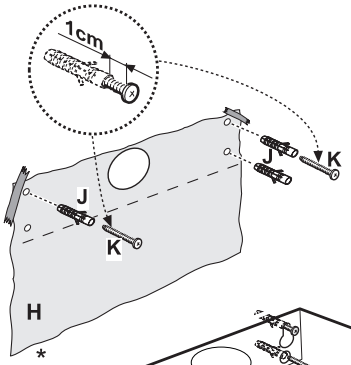

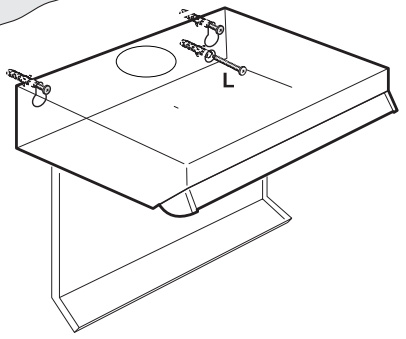

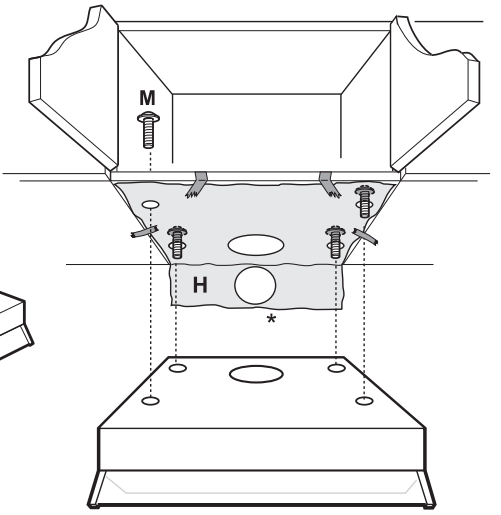

Grease filter

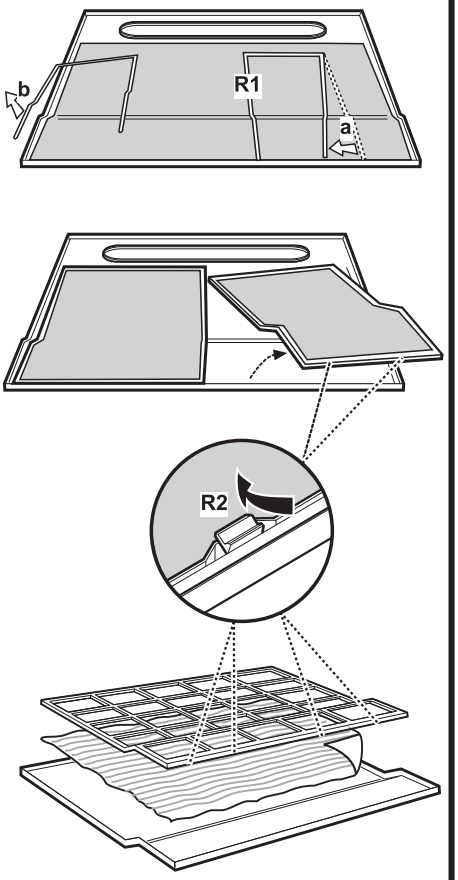

Carbon filter

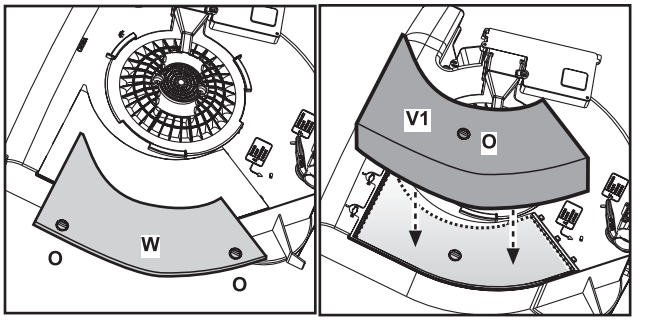

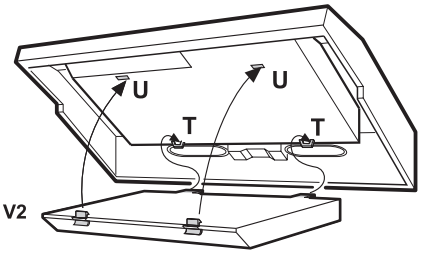

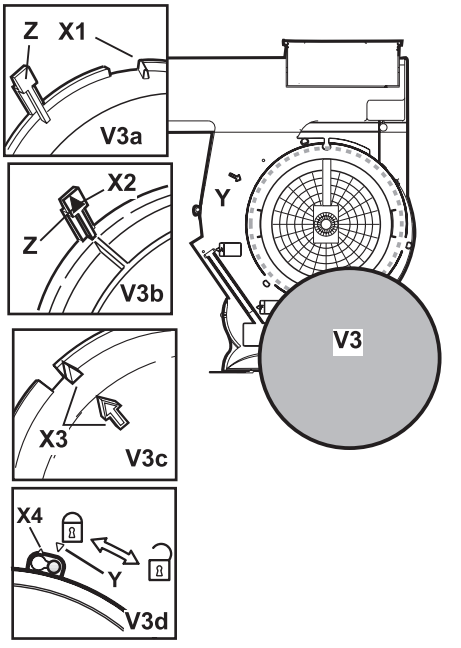



400011085444

Printed in Italy
01/2017



GB