# 5" Outdoor Wall Mount Dome

| Model Name | Model Description | Item Code |
|---|---|---|
| A-ODW5C(OW) | 24VAC 5" clear dome | 1381V094 |
| A-ODW5T(OW) | 24VAC 5" tinted dome | 1586V910 |
| A-ODW5C12(OW) | 12VDC 5" clear dome | 1923V392 |
| A-ODW5T12(OW) | 12VDC 5" tinted dome | 1923V393 |



Ideal for high zoom PTZ type cameras, the ASC series of wall mount outdoor domes offer high quality construction of the enclosure and electronics, as well as a high quality clear or tinted capsule. A built in Heater and blower allow for year round operation in almost any environment, including a 2nd heater option for extreme cold environments*. The dome is also offered in 2 power varieties, 24VAC, and 12VDC for a wide range of applications. Various mounting options include a Pole Mount Adapter , and a NPT pipe coupler for pendant mount installation.

Compatible Canon Camera Models:
VB-H41 , VB-M40 , VB-C60

## Specifications

| | | | |
|---|---|---|---|
| Operating Environment | | Outdoor | |
| Operating Temperature | | -20˚C (-4˚F) ~ +40˚C (+104˚F) under normal outdoor environment. | |
| IP Rate | | IP54 (Vent Holes "Open"), IP66 (Vent Holes "Closed" with provided Seal) | |
| Max Wind Load | | Products will withstand wind speeds up to 136 MPH | |
| Housing | | Material = PC/ABS UL94 V-0 Standard Color : OFF WHITE (Housing Top = Aluminum)<br>*Vandal Resistant M4 Screws x 7 pcs. & Tool Set Model A-VSM4TL is optional. | |
| Capsule | Material: | PC UL 94 V-0 | |
| | Light Loss: | A-ODW5C(OW) / A-ODW5C12(OW) | Almost Zero |
| | | A-ODW5T(OW) / A-ODW5T12(OW) | ~60% |
| Mounting Bracket | | Wall Mount W type<br>Material = Aluminum Powder Coat Finish, Standard Color : OFF WHITE | |
| Weight | | Approx. 3.9kgs (8.6 lbs) | |
| Recommended Screw | | 3/8" or M8~M10 Stainless Screws x 4 (Not included in product) | |
| Heater | | A-ODW5C(OW) / A-ODW5T(OW) | 1 X 24VAC 25W Standard<br>Optional Additional Heater for extreme cold -20˚C (-4˚F) ~ -60˚C (-76˚F)<br>Standard 24VAC 25W + Additional 24VAC 25W = Total 24VAC 50W<br>Auto by thermostat 4.4˚C (40˚F) = ON 16˚C (60˚F) = OFF |
| | | A-ODW5C12(OW) / A-ODW5T12(OW) | 1 X 12VDC 25W Standard<br>Optional Additional Heater for extreme cold -20˚C (-4˚F) ~ -60˚C (-76˚F)<br>Standard 12VDC 25W + Additional 12VDC 25W = Total 12VDC 50W<br>Auto by thermostat 4.4˚C (40˚F) = ON 16˚C (60˚F) = OFF |
| Blower | | A-ODW5C(OW) / A-ODW5T(OW) | 24VAC Input<br>Manufacturer : Nidec Servo Corporation Model EUDC12D8<br>DC12V 0.04A 0.5W x 2 units<br>Auto by thermostat 35˚C (95˚F) = ON 27˚C (80˚F) = OFF |
| | | A-ODW5C12(OW) / A-ODW5T12(OW) | 12VDC Input<br>Manufacturer : Nidec Servo Corporation Model EUDC12D8<br>DC12V 0.04A 0.5W x 2 units<br>Auto by thermostat 35˚C (95˚F) = ON 27˚C (80˚F) = OFF |
| Fuse | | A-ODW5C(OW) / A-ODW5T(OW) | 125V 5A(Size 5.2 x 20mm) for 24VAC Blower & Heater(Extra 1 pc. is provided.) |
| | | A-ODW5C12(OW) / A-ODW5T12(OW) | No fuse for 12VDC Blower and Heater |
| Standard & Compliance | | RoHS, UL (File #E313815), CE | |

*24VAC ONLY

Canon

ASC
ASC Corporation

# 5" Outdoor Wall Mount Dome

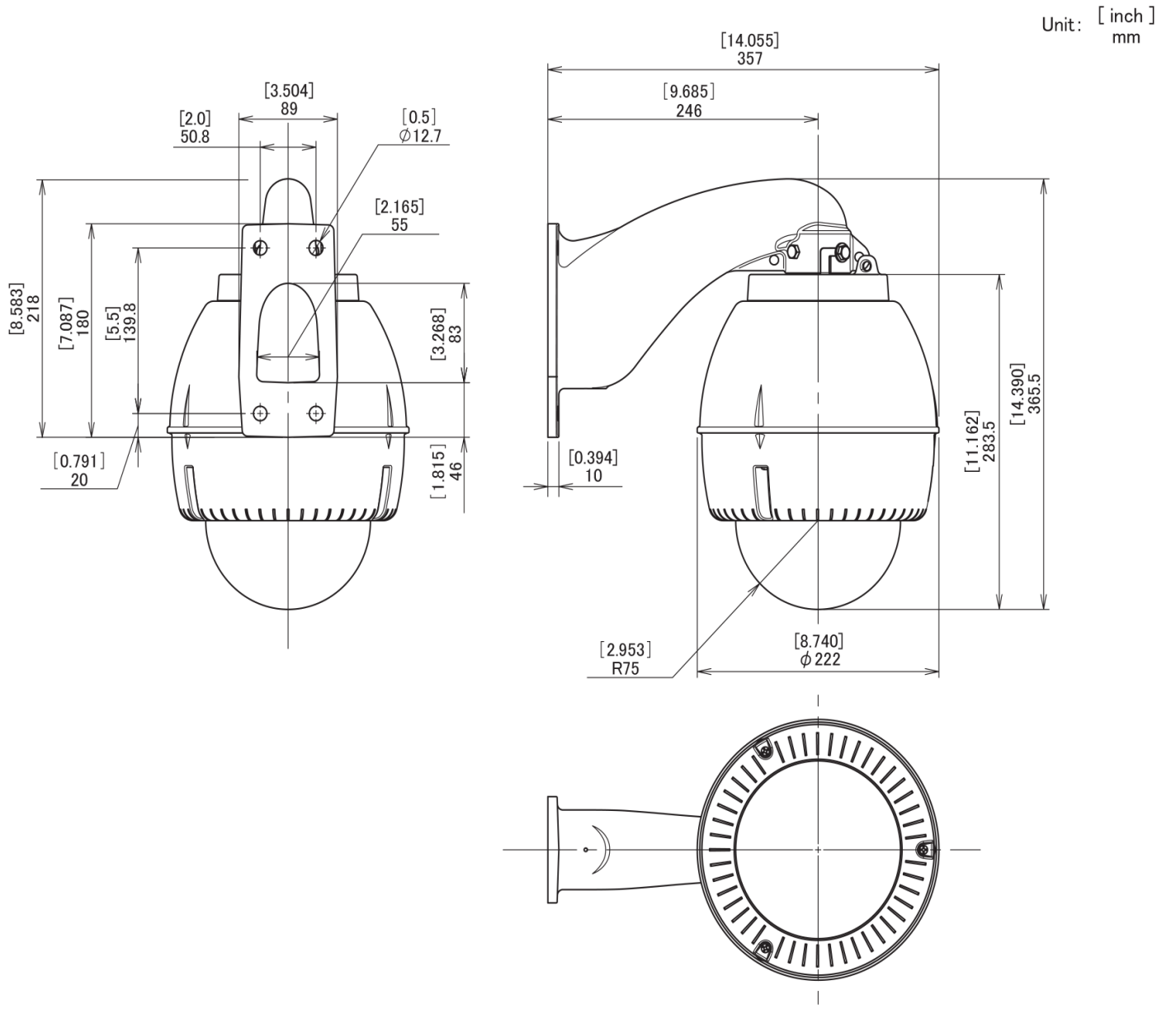


| Wall Mount Dome Accessories | | |
|---|---|---|
| 2120V066 | A-BK3(OW) | Pole Mount Adapter and 59" length Non-Tool Aluminum Clamp (Minimum Pole Diameter 4") |
| 1381V106 | A-BK3S(OW) | Pole Mount Adapter and 59" length Non-Tool Stainless Clamp (Minimum Pole Diameter 4") |
| 1381V100 | A-CM100 | Narrow ceiling mount bracket. Steel construction with powder coat finish |
| 1381V101 | A-CM100NPT | Ceiling mount bracket for 1 1/2" NPT. Steel construction with powder coat finish |
| 1381V102 | A-CP100NPT | Coupling for dome housing for 1 1/2" NPT. Steel construction with powder coat finish |
| 1381V107 | A-CM3 | Corner Mount Adapter |
| 1381V103 | A-RCP5T | Replacement capsule, 5" Tinted |
| 2030V463 | A-RCP5C | Replacement capsule, 5" Clear |
| 2038V640 | A-H24 | Additional Heater for A-ODW |

Canon

ASC
ASC Corporation