5" Outdoor Wall Mount Dome with Sunshield

Model Name	Model Description	Item Code
A-ODW5SCS(OW)	24VAC 5" clear dome with sunshield	1381V096
A-ODW5TS(OW)	24VAC 5" tinted dome with sunshield	1586V918
A-ODW5C12S(OW)	12VDC 5" clear dome with sunshield	1923V394
A-ODW5T12S(OW)	12VDC 5" tinted dome with sunshield	1923V395



Ideal for high zoom PTZ type cameras, the ASC series of wall mount outdoor domes offer high quality construction of the enclosure and electronics, as well as high quality clear and tinted capsules. The sunshield provides addition protection to reduce the temperature inside the dome without a significant increase in dome dimensions. A built in heater and blower allow for year round operation in almost any environment, including an optional 2nd heater for extreme cold environments*. The dome is also offered in 2 power varieties, 24VAC, and 12VDC, for a wide range of applications. Various mounting options include a Pole Mount Adapter and n NPT pipe coupler for a pendent mount install.

Compatible Canon Camera Models:
VB-H41 , VB-M40 , VB-C60

Specifications

Operating Environment		Outdoor	
Operating Temperature		-20˚C (-4˚F) ~ +40˚C (+104˚F) under normal outdoor environment.	
IP Rate		IP54 (Vent Holes "Open"), IP66 (Vent Holes "Closed" with provided Seal)	
Max Wind Load		Products will withstand wind speeds up to 136 MPH	
Housing		Material = PC/ABS UL94 V-0 Standard Color : OFF WHITE (Housing Top = Aluminum)	
Capsule	Material:	PC UL 94 V-0	
	Light Loss:	A-ODW5SCS(OW) / A-ODW5C12S(OW)	Almost Zero
		A-ODW5TS(OW) / A-ODW5T12S(OW)	~60%
Mounting Bracket		Wall Mount W type Material = Aluminum Powder Coat Finish, Standard Color : OFF WHITE	
Weight		Approx. 4.5kgs (8.9 lbs)	
Recommended Screw		3/8" or M8~M10 Stainless Screws x 4 (Not included in product)	
Heater		A-ODW5SCS(OW) / A-ODW5TS(OW)	1 X 24VAC 25W Standard Optional Additional Heater for extreme cold -20˚C (-4˚F) ~ -60˚C (-76˚F) Standard 24VAC 25W + Additional 24VAC 25W = Total 24VAC 50W Auto by thermostat 4.4˚C (40˚F) = ON - 16˚C (60˚F) = OFF
		A-ODW5C12S(OW) / A-ODW5T12S(OW)	1 X 12VDC 25W Standard Optional Additional Heater for extreme cold -20˚C (-4˚F) ~ -60˚C (-76˚F) Standard 12VDC 25W + Additional 12VDC 25W = Total 12VDC 50W Auto by thermostat 4.4˚C (40˚F) = ON - 16˚C (60˚F) = OFF
Blower		A-ODW5SCS(OW) / A-ODW5TS(OW)	24VAC Input Manufacturer : Nidec Servo Corporation Model EUDC12D8 DC12V 0.04A 0.5W x 2 units Auto by thermostat 35˚C (95˚F) = ON - 27˚C (80˚F) = OFF
		A-ODW5C12S(OW) / A-ODW5T12S(OW)	12VDC Input Manufacturer : Nidec Servo Corporation Model EUDC12D8 DC12V 0.04A 0.5W x 2 units Auto by thermostat 35˚C (95˚F) = ON - 27˚C (80˚F) = OFF
Fuse		A-ODW5SCS(OW) / A-ODW5TS(OW)	125V 5A(Size 5.2 x 20mm) for 24VAC Blower & Heater(Extra 1 pc. is provided.)
		A-ODW5C12S(OW) / A-ODW5T12S(OW)	No fuse for 12VDC Blower and Heater
Standard & Compliance		RoHS, UL (File #E313815), CE	

* 24VAC Only

Canon

ASC
ASC Corporation

Canon U.S.A., Inc. One Canon Park, Melville, NY 11747 U.S.A.

5" Outdoor Wall Mount Dome with Sunshield

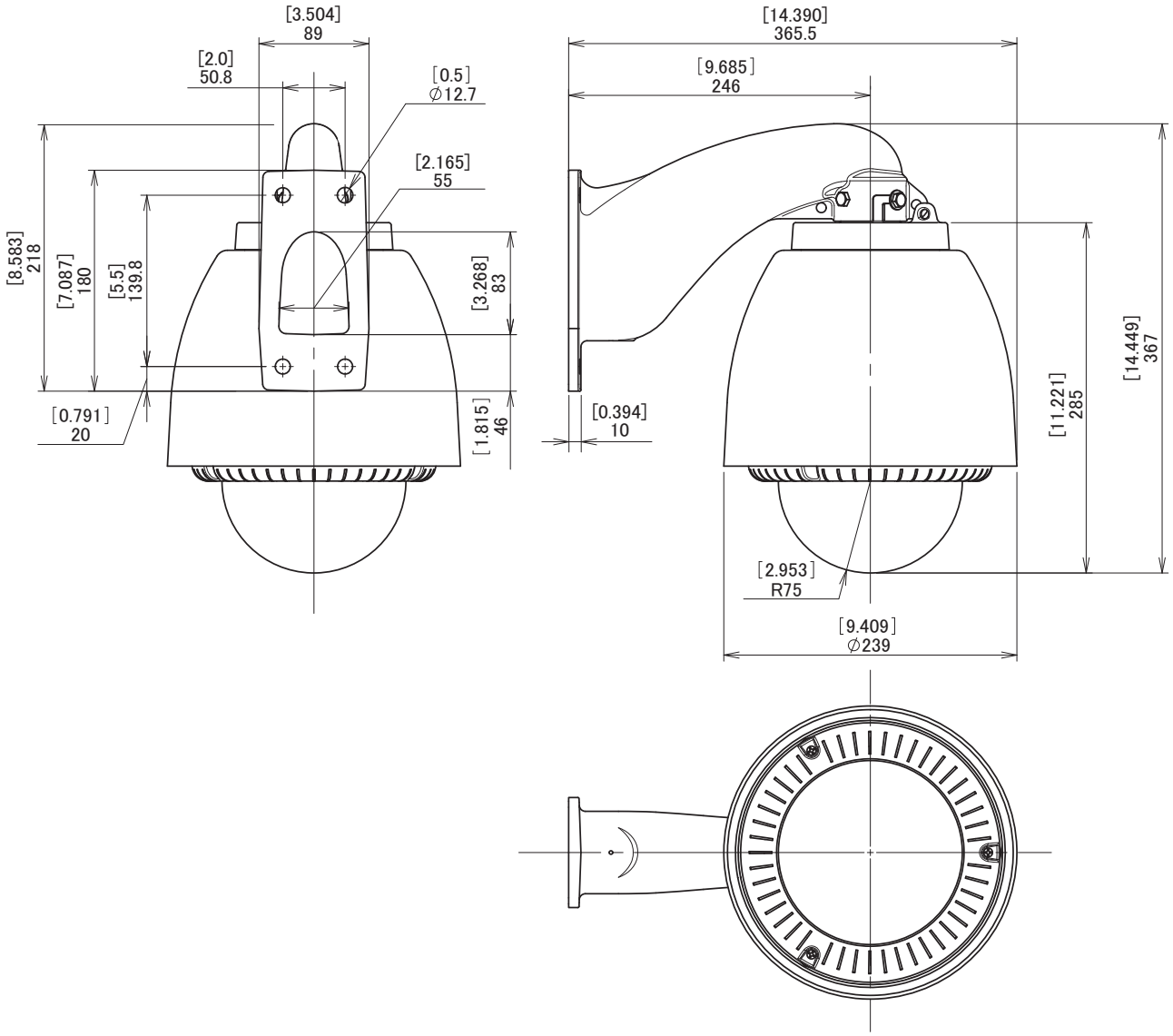

Wall Mount Dome Accessories

2120V066	A-BK3(OW)	Pole Mount Adapter and 59" length Non-Tool Aluminum Clamp (Minimum Pole Diameter 4")
1381V106	A-BK3S(OW)	Pole Mount Adapter and 59" length Non-Tool Stainless Clamp (Minimum Pole Diameter 4")
1381V100	A-CM100	Narrow ceiling mount bracket. Steel construction with powder coat finish
1381V101	A-CM100NPT	Ceiling mount bracket for 1 1/2" NPT. Steel construction with powder coat finish
1381V102	A-CP100NPT	Coupling for dome housing for 1 1/2" NPT. Steel construction with powder coat finish
1381V107	A-CM3	Corner Mount Adapter
1381V103	A-RCP5T	Replacement capsule, 5" Tinted
2030V463	A-RCP5C	Replacement capsule, 5" Clear
2038V640	A-H24	Additional Heater for A-ODW

Canon

ASC
ASC Corporation

Canon U.S.A., Inc. One Canon Park, Melville, NY 11747 U.S.A.