PHILIPS

Lighting



CoreLine Surface-mounted

SM120V LED27S/840 PSD W20L120 VAR-PC

SM120V - LED Module, system flux 2700 lm - 840 neutral white - Power supply unit with DALI interface - Width 0.20 m, length 1.20 m - Variable linear-lens array in polycarbonate cover

Whether for a new building or renovation of an existing space, customers want lighting solutions that provide quality of light and substantial energy and maintenance savings. The new CoreLine Surface-mounted range of LED products can be used to replace functional luminaires in general lighting applications. The process of selecting, installing and maintaining is so easy – it's a simple switch.

Product data

General Information	
Number of light sources	2 pcs
Lamp family code	LED27S [LED Module, system flux 2700 lm]
Light source color	840 neutral white
Cap-Base	- [-]
Light source replaceable	No
Gear	-
Driver/power unit/transformer	Power supply unit with DALI interface
Driver included	Yes
Optical cover/lens type	Variable linear-lens array in polycarbonate cover
Emergency lighting	-
Connection	Push-in connector and pull relief
Cable	-

Protection class IEC	Safety class I
Glow-wire test	Temperature 850 °C, duration 30 s
Flammability mark	For mounting on normally flammable surfaces
Safety device	No [-]
CE mark	CE mark
ENEC mark	ENEC mark
UL mark	-
Product family code	SM120V

Operating and Electrical	
Input Voltage	220 to 240 V
Input Frequency	50 to 60 Hz

CoreLine Surface-mounted

Controls and Dimming	
Dimmable	Yes

Mechanical and Housing	
Geometry	Width 0.20 m, length 1.20 m
Housing Material	Steel
Reflector material	Steel
Optical cover/lens material	Polycarbonate
Gear tray material	Steel
Fixation material	Steel

Approval and Application	
Ingress protection code	IP20 [Finger-protected]
Mech. impact protection code	IK02 [0.2 J standard]

Initial Performance (IEC Compliant)	
Initial luminous flux	2700 lm
Luminous flux tolerance	+/-10%
Initial LED luminaire efficacy	120 lm/W
Init. Corr. Color Temperature	4000 K
Init. Color Rendering Index	≥80
Initial chromaticy	(0.38, 0.38) SDCM <3
Initial input power	22.5 W
Power consumption tolerance	+/-10%

Over Time Performance (IEC Compliant)	
Driver failure rate at 5000 h	1 %
Median useful life L70B50	50000 h
Median useful life L80B50	30000 h
Median useful life L90B50	15000 h

Application Conditions	
Ambient temperature range	+10 to +40 °C
Average ambient temperature	25 °C
Maximum dim level	1%
Suitable for random switching	Yes (relates to presence/ movement detection and daylight harvesting)

Product Data	
Full product code	871829126655600
Order product name	SM120V LED27S/840 PSD W20L120 VAR-PC
EAN/UPC - Product	8718291266556
Order code	910501996803
Numerator - Quantity Per Pack	1
Numerator - Packs per outer box	1
Material Nr. (12NC)	910501996803
Net Weight (Piece)	3.100 kg

Dimensional drawing

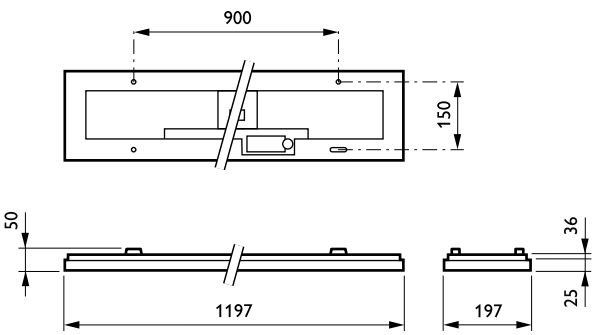

CoreLine Surface-mounted SM120V



© 2017 Philips Lighting Holding B.V. All rights reserved. Philips Lighting reserves the right to make changes in specifications and/or to discontinue any product at any timewithout notice or obligation and will not be liable for any consequences resulting from the use of this publication.

www.lighting.philips.com
2017, January 30 - data subject to change