

MASTER LEDspot LV

MAS LEDspotLV D 7-35W 927 MR16 24D

Delivering a warm, halogen-like accent beam, MASTER LEDspot LV is an ideal retrofit solution for spot and general lighting applications in the hospitality industry. It is particularly suited to public areas such as receptions, lobbies, corridors, stairwells and washrooms, where the light is on all the time. The robustly designed MASTER LEDspot offers a choice of beam angles for a clearly defined beam spread. There is no UV or IR in the beam, making it suitable for illuminating heat-sensitive objects (food, organic materials, paintings, etc.). The patented intelligent driver enables broad compatibility with existing electromagnetic and electronic halogen transformers. The dimmable versions drive further efficiencies, while helping to create the desired atmosphere.

Product data

General Information	
Cap base	GU5.3 [GU5.3]
Bulb shape	MR16 [2inch/50mm]
Nominal lifetime (nom.)	40000 h
Switching cycle	50000X
Technical type	7-35W

Light Technical	
Beam Angle (Nom)	24 °
Light distribution	24D [Medium beam]
Luminous intensity (nom.)	2100 cd
Colour designation	Warm white (WW)
Rated beam angle	24 °
Correlated colour temperature (nom.)	2700 K
Luminous efficacy (rated) (nom.)	57.14 lm/W
Colour consistency	<6
Color rendering index (nom.)	90

LLMF at end of nominal lifetime (nom.)	70 %
Luminous Flux In 90° Cone (Rated)	400 lm

Operating and Electrical	
Power (Rated) (Nom)	7 W
Lamp current (nom.)	720 mA
Wattage equivalent	35 W
Starting time (nom.)	0.5 s
Warm-up time to 60% light (nom.)	1 s
Power factor (nom.)	0.7
Voltage (Nom)	12 V

Temperature	
T-Case maximum (nom.)	92 °C

MASTER LEDspot LV

Controls and Dimming	
Dimmable	Yes

Approval and Application	
Energy-saving product	Yes
Suitable for accent lighting	Yes
Energy efficiency label (EEL)	A
Energy Consumption kWh/1000 h	8 kWh

Product Data	
Full product code	871869665923600

Order product name	MAS LEDspotLV D 7-35W 927 MR16 24D
EAN/UPC – product	8718696659236
Order code	65923600
Numerator – quantity per pack	1
Numerator – packs per outer box	10
Material no. (12NC)	929001152832
Net weight (piece)	0.045 kg

Warnings and Safety

- Operating temperature range is between -20° C and 45° C ambient
- Only to apply in dry or damp locations and most of open fixtures with lamp-holders that offer sufficient space (10 mm free air space)
- Not intended for use with emergency light fixtures or exit lights

Dimensional drawing

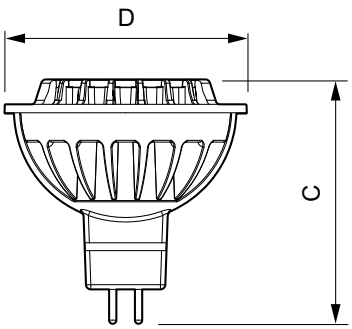

LED D 7-35W 827 MR16 24D

Product	D	C
MAS LEDspotLV D 7-35W 927 MR16 24D	50.5 mm	50.5 mm

Photometric data

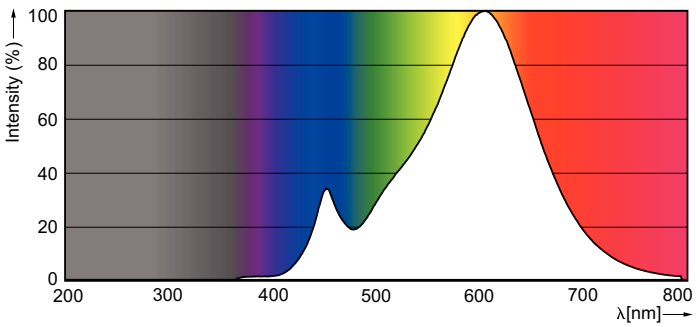

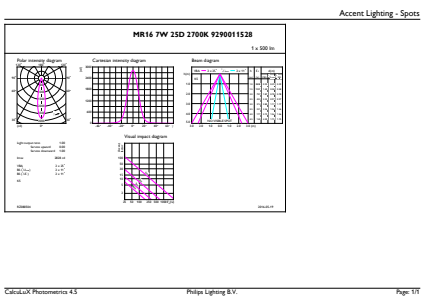



© 2017 Philips Lighting Holding B.V. All rights reserved. Philips Lighting reserves the right to make changes in specifications and/or to discontinue any product at any timewithout notice or obligation and will not be liable for any consequences resulting from the use of this publication.

www.lighting.philips.com
2017, January 31 - data subject to change