

CorePro LEDspot LV

CoreProLEDspotLV ND 2.8-20W 827 MR16 36D

CorePro LEDspots are a perfect fit for spot lighting and deliver warm halogen-like light. They are compatible with most existing fixtures with MR16 GU5.3 holders and are designed as a retrofit replacement for halogen or incandescent spots. LEDlamps deliver huge energy savings and minimize maintenance cost.

Product data

General Information	
Cap-Base	GU5.3 [GU5.3]
Bulb Shape	MR16 [2inch/50mm]
Nominal Lifetime (Nom)	15000 h
Switching Cycle	50000X
Technical Type	2.8-20W

Light Technical	
Color Code	827 [CCT of 2700K]
Beam Angle (Nom)	36 °
Luminous Intensity (Nom)	500 cd
Color Designation	Warm White (WW)
Rated Beam Angle	36 °
Correlated Color Temperature (Nom)	2700 K
Luminous Efficacy (rated) (Nom)	89.29 lm/W
Color Consistency	<6
Color Rendering Index (Nom)	80
LLMF At End Of Nominal Lifetime (Nom)	70 %
Luminous Flux In 90° Cone (Rated)	250 lm

Operating and Electrical	
Power (Rated) (Nom)	2.8 W
Lamp Current (Nom)	350 mA
Wattage Equivalent	20 W
Starting Time (Nom)	0.5 s
Warm Up Time To 60% Light (Nom)	1 s
Power Factor (Nom)	0.5
Voltage (Nom)	12 V

Temperature	
T-Case Maximum (Nom)	76 °C

Controls and Dimming	
Dimmable	No

Approval and Application	
Energy Saving Product	Yes
Suitable For Accent Lighting	Yes
Energy Efficiency Label (EEL)	A++
Energy Consumption kWh/1000 h	4 kWh

Product Data	
Full product code	871869657939800
Order product name	CoreProLEDspotLV ND 2.8-20W 827 MR16 36D

CorePro LEDspot LV

EAN/UPC - Product	8718696579398
Order code	929001239902
Numerator - Quantity Per Pack	1
Numerator - Packs per outer box	10

Material Nr. (12NC)	929001239902
Net Weight (Piece)	0.045 kg

Dimensional drawing

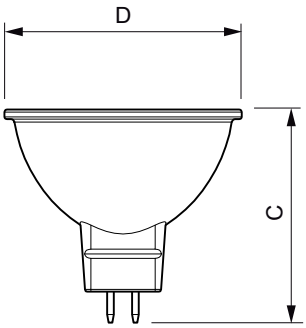

Product	D	C
CoreProLEDspotLV ND 2.8-20W 827 MR16 36D	50 mm	46 mm

MR16 12V 3W-20W 240lm 36D 2700K GU5.3 ND

Photometric data

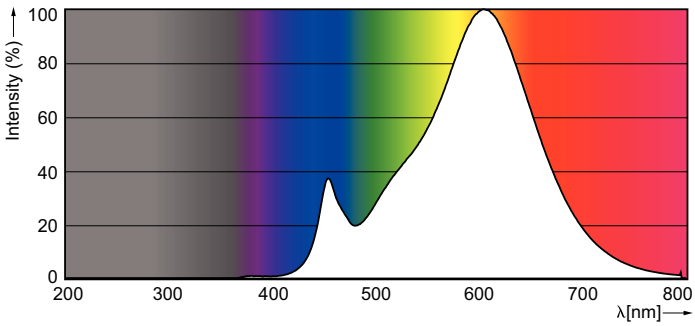

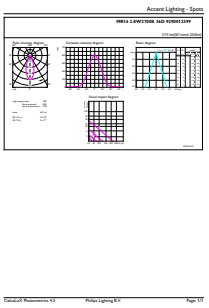

© 2017 Philips Lighting Holding B.V. All rights reserved. Philips Lighting reserves the right to make changes in specifications and/or to discontinue any product at any timewithout notice or obligation and will not be liable for any consequences resulting from the use of this publication.