PHILIPS

Lighting



Vaya Tube

BCC420 4000 FR ETH L305 PP150 UL CE CQC

BCC420 - Ethernet

Vaya Tube is ideal for exterior accent and contour lighting applications, as well as for low-resolution graphics with a resolution of up to 150 mm (6 inches) per pixel. Up to 20 fixtures can be connected in two linear runs of 12 m (39 ft) per control module. Ethernet as well as standard DMX512 control make this product easy to use with Philips Color Kinetics or third-party DMX controllers. For more information please visit www.colorkinetics.com/vaya/.

Product data

General Information	
Lamp family code	LED-MD [LED Multi-die]
Light source color	White
Light source replaceable	No
Optic type	Wide beam
Optical cover/lens type	Polycarbonate bowl/cover
Luminaire light beam spread	180°
Control interface	Ethernet
Color	Gray
CE mark	CE mark
UL mark	UL mark
CQC mark	CQC-mark
Lifetime to 50% luminous flux	50000 h
PSE mark	PSE mark
WEEE mark	WEEE mark
Product family code	BCC420

Operating and Electrical	
Input Voltage	24 V

Mechanical and Housing	
Housing Material	Polycarbonate
Optical cover/lens material	Polycarbonate
Optical cover/lens shape	Curved
Optical cover/lens finish	Frosted
Length	305 mm

Approval and Application	
Ingress protection code	IP66 [Dust penetration-protected, jet-proof]
Mech. impact protection code	IK10 [20 J vandal-resistant]

Initial Performance (IEC Compliant)	
Init. Corr. Color Temperature	4000 K

Vaya Tube

Application Conditions	
Ambient temperature range	-40 to +40 °C
Average ambient temperature	25 °C

Product Data	
Full product code	871829164862899
Order product name	BCC420 4000 FR ETH L305 PP150 UL CE CQC
EAN/UPC - Product	8718291648628

Order code	912400130508
Numerator - Quantity Per Pack	1
Numerator - Packs per outer box	12
Material Nr. (12NC)	912400130508
Net Weight (Piece)	0.360 kg

CE IP66 IK10

Dimensional drawing

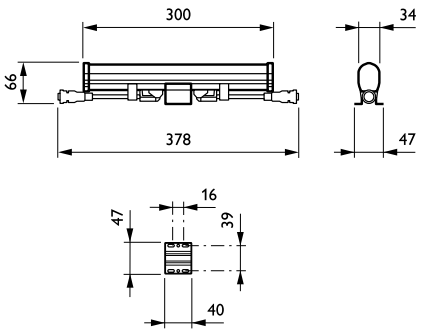

Vaya

© 2017 Philips Lighting Holding B.V. All rights reserved. Philips Lighting reserves the right to make changes in specifications and/or to discontinue any product at any timewithout notice or obligation and will not be liable for any consequences resulting from the use of this publication.