

OccuSwitch Wireless

LRH1765/00 IP65 Holder OS W C-C-W Sensor

The OccuSwitch Wireless family consists of wireless sensors and an actuator (relay-box). Savings of up to 30% can be achieved by simply turning off the lights in unoccupied areas. Battery-operated, with a typical lifetime of 8-10 years. The actuator can switch any load up to 6 A and can be located in the ceiling or corridor. Designed to control an area of 20-25 m2 but the area can be expanded to 160 m2 by adding extra sensors. Up to 10 sensors and/or actuators can be combined in one parallel network. The maximum distance between the sensor and actuator is 10 meters (depending on the application).A detachable mains wiring connector enables easy installation. Separate Wieland and CEE cables are available for even easier, faster and trouble-free installation. With the extended scope of OccuSwitch Wireless functionality (increased number of sensors and interoperable with wireless ActiLume range), all wireless devices should be from the same version (LRM/LRA/LLC XXXX/10 or higher).

Product data

Product Data	
Full product code	871829174813700
Order product name	LRH1765/00 IP65 Holder OS W C-C-W Sensor
EAN/UPC - Product	8718291748144
Order code	913700360103
Numerator - Quantity Per Pack	1

Numerator - Packs per outer box	6
Material Nr. (12NC)	913700360103
Net Weight (Piece)	185.000 g

OccuSwitch Wireless

Dimensional drawing

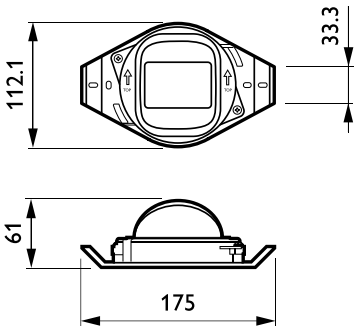

LRH1765/00 IP65 Holder OS W C-C-W Sensor

Product
LRH1765/00 IP65 Holder OS W C-C-W Sensor

© 2017 Philips Lighting Holding B.V. All rights reserved. Philips Lighting reserves the right to make changes in specifications and/or to discontinue any product at any timewithout notice or obligation and will not be liable for any consequences resulting from the use of this publication.