IRTO49-100
IRTO55-100



Display size
49" & 55"

Xtreme™ Outdoor IR Touch Overlay

FOR 49" & 55" OPTICALLY BONDED PEERLESS-AV®

XTREME™ OUTDOOR DISPLAYS

Turn your Peerless-AV® Xtreme™ Outdoor Display into a multi-touch display with the Xtreme™ Outdoor IR Touch Overlay. The Touch Overlay is manufactured with a full aluminum chassis, ensuring durable, lasting performance that matches the reliability of the display. With the incorporated infrared technology, the overlay is capable of responding to ten simultaneous points of touch and can detect any input including a bare finger, gloved finger, stylus or pen. Effortlessly upgrade your outdoor display into an interactive user experience with the Peerless-AV® Xtreme™ Outdoor Touch Overlay.

Additional Features

- ☑ Tested to IP65/NEMA 4X standards to provide protection against dust and water
- ☑ Works well with many input devices such as a finger, glove, pointer, etc.
- ☑ Easy setup, no driver installation required*
- ☑ Ten point IR touch allows for flexibility in content selection
- ☑ Made from powder coated aluminum
- ☑ HID Compatible
- ☑ USB cable included
- ☑ Works with multiple operating systems (see specifications)
- ☑ Security screws fasten overlay to display to prevent theft

* Portrait orientation may require driver installation or calibration



IP65 RATED
Prevents the ingress of dust and water to IR electronics

INCREASED SECURITY
Security screws fasten the overlay to the display for theft prevention



Shown with Xtreme™ Outdoor Landscape Kiosk, KOL555-XTR

info@peerless-av.com
peerless-av.com

peerless-AV®

Model Numbers

WARRANTY: 2 years

IRTO49-100	Xtreme™ Outdoor IR Touch Overlay for 49" Optically Bonded Peerless-AV® Xtreme™ Outdoor Display
IRTO55-100	Xtreme™ Outdoor IR Touch Overlay for 55" Optically Bonded Peerless-AV® Xtreme™ Outdoor Display

Touch Specifications

ENVIRONMENTAL RATING	IP65 / NEMA 4X
OPERATING TEMPERATURE	-4°F - 158°F (-20°C - 70°C)
STORAGE TEMPERATURE	-40°F - 185°F (-40°C - 85°C)
SIGNAL CONNECTION	USB A Cable, 4.5 Feet

COMPATABLE OPERATING SYSTEMS	Windows Vista, XP, 7, 8, 10, Mac OS Linux® Android™
TOUCH POINTS	10-Point Maximum
TOUCH RESPONSE	3-10 ms

Product Specifications

	DIMENSIONS (W x H x D)	FINISH	AVAILABLE COLORS
IRTO49-100	46.39" x 27.89" x 4.57" (1178 x 708 x 116mm)	Powder Coat	Textured black
IRTO55-100	51.79" x 30.96" x 4.93" (1315 x 786 x 125mm)		

Package Specifications

	PACKAGE UPC CODE	PACKAGE CONTENTS	UNITS IN PACKAGE
IRTO49-100	IRTO49-100: 735029313762	IR Touch Overlay, Corner Brackets, Hardware, Instruction Manual	1
IRTO55-100	IRTO55-100: 735029313274		

Optional Accessories

KOL549-(S)-XTR:	Xtreme™ Outdoor Landscape Kiosk with (1) 49" Optically Bonded Peerless-AV® Xtreme™ Display
KOL555-(S)-XTR:	Xtreme™ Outdoor Landscape Kiosk with (1) 55" Optically Bonded Peerless-AV® Xtreme™ Display
CL-49PLC68-OB:	49" Xtreme™ Outdoor Daylight Readable Display - Landscape
CLP-49PLC68-OB:	49" Xtreme™ Outdoor Daylight Readable Display - Portrait
CL-55PLC68-OB:	55" Xtreme™ Outdoor Daylight Readable Display - Landscape
CLP-55PLC68-OB:	55" Xtreme™ Outdoor Daylight Readable Display - Portrait

All dimensions = inch (mm)

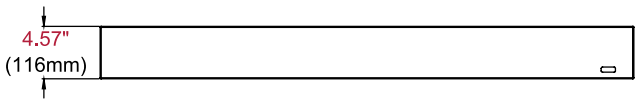

IRTO49-100(P) TOP VIEW

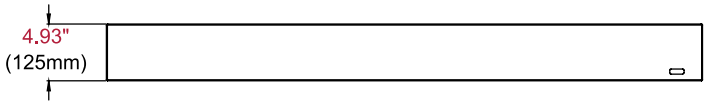

IRTO55-100(P) TOP VIEW

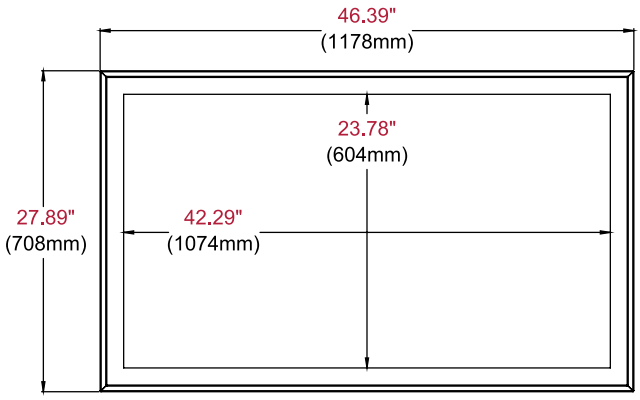

IRTO49-100(P) BACK VIEW

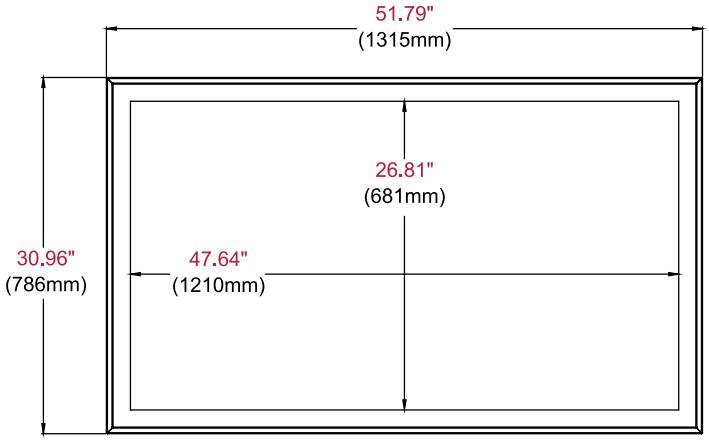

IRTO55-100(P) BACK VIEW

Architect Specifications

The Xtreme™ Outdoor IR Touch Overlay shall be a Peerless-AV model IRTO49-100 or IRTO55-100 and shall be located where indicated on the plans. Assembly and installation shall be done according to instructions provided by the manufacturer.

Visit peerless-av.com to see the complete line of AV solutions from Peerless-AV, including outdoor displays, wireless, kiosks, digital audio, display mounts, projector mounts, carts/stands, and a full assortment of accessories.

Peerless-AV
2300 White Oak Circle
Aurora, IL 60502 USA

(800) 865-2112
(630) 375-5100
Fax: (800) 359-6500

Peerless-AV Europe
Unit 3 Watford Interchange
Colonial Way, Watford
Herts, WD24 4WP
United Kingdom
+44 (0) 1923 200100
Fax: +44 (0) 1923 200101

Peerless-AV de México
Ave de las Industrias 413
Parque Industrial Escobedo
Escobedo, N.L.,
Mexico 66050
+52 (81) 8384-8300
Fax: +52 (81) 8384-8360

© 2016 Peerless Industries, Inc. Peerless-AV® is a registered trademark and Xtreme™ is trademark of Peerless Industries, Inc. All rights reserved.