IRTO49-100, IRTO49-S-100, IRTO55-100, IRTO55-S-100

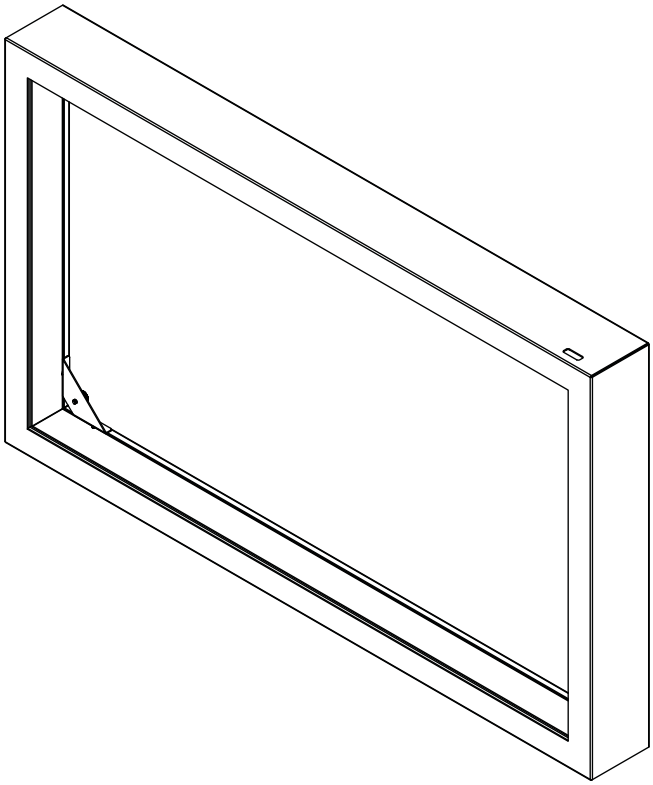

⚠ WARNING

ENG - Before installing make sure the supporting surface will support the combined load of the equipment and hardware. Screws must be tightly secured. Do not overtighten screws or damage can occur and product may fail. Never exceed the Maximum Load Capacity. Always use an assistant or mechanical lifting equipment to safely lift and position equipment. Be careful not to pinch fingers when operating the mount. For support please call customer care at 1-800-865-2112.

⚠ ADVERTENCIA

ESP - Antes de instalarlo, asegúrese de que la superficie de apoyo sostendrá la carga combinada del equipo y los fijadores. Los tornillos se tienen que fijar firmemente. No apriete los tornillos en exceso, ya que se pueden dañar y el producto podría fallar. Nunca exceda la Capacidad Máxima de Carga. Siempre cuente con la ayuda de un asistente o utilice un equipo mecánico de izar para levantar y colocar el equipo con más seguridad. Tenga cuidado de no pincharse los dedos cuando extienda y recoja el soporte contra la pared. Si necesita ayuda, por favor, llame a Servicio al Cliente de Peerless al 1-800-865-2112.

⚠ ADVERTISSEMENT

FRN - Avant de procéder à l'installation, assurez-vous que la surface de support peut soutenir la charge totale de l'équipement ainsi que des pièces de fixation. Les vis doivent être serrées au maximum. Ne serrez pas trop les vis pour éviter tout risque d'endommager le produit et de causer sa défaillance. Ne dépassez jamais la capacité de charge maximale. Pour lever et positionner l'équipement en toute sécurité, faites-vous toujours aider par une autre personne ou utilisez un dispositif de levage mécanique. Prenez garde à ne pas vous pincer les doigts en dépliant le support et en le repliant contre le mur. Pour toute assistance, veuillez contacter le service à la clientèle au 1-800-865-2112.

ENG Symbols
ESP Símbolos
FRN Symboles



ENG Back
ESP Parte trasera
FRN Arrière



ENG **WARNING**
ESP **ADVERTENCIA**
FRN **ADVERTISSEMENT**

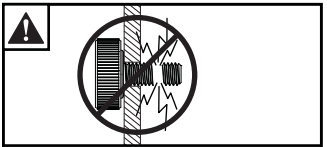

ENG Do not overtighten screws.
ESP No apriete de más los tornillos.
FRN Ne pas trop serrer les vis.

ENG Tools Needed for Assembly.
ESP Herramientas necesarias para el ensamblaje.
FRN Outils nécessaires au montage.



ENG To properly tighten screws: Tighten until screw head makes contact, then tighten another 1/2 turn. Do not overtighten screws.
ESP Apriete adecuado de los tornillos: Apriete hasta que la cabeza del tornillo haga contacto y luego apriete otra 1/2 vuelta. No apriete de más los tornillos.
FRN Pour bien serrer les vis : Serrez jusqu'à ce que la tête de la vis entre en contact, puis serrez encore d'un 1/2 tour. Ne serrez pas trop les vis.

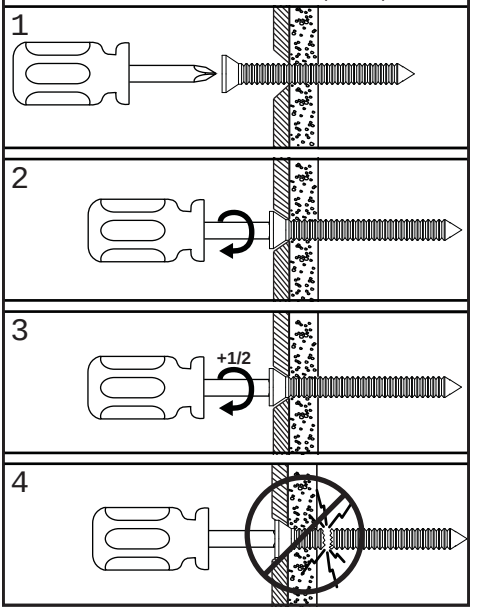

ENG Parts (Before beginning, make sure you have all parts shown below).
ESP Piezas (antes de iniciar, asegúrese de tener todas las piezas siguientes).
FRN Pièces (avant de commencer, assurez-vous d'avoir toutes les pièces illustrées ci-dessous).

Parts List

	Description	Qty	IRTO49-100 Part #	IRTO49-S-100 Part #	IRTO55-100 Part #	IRTO55-S-100 Part #
A	overlay	1	180-T1280	180-4280	180-T1281	180-4281
B	corner bracket	4	180-T1428	180-T1428	180-T1428	180-T1428
C	M5 x 10mm self-tapping screws	8	520-D1164	520-D1164	520-D1164	520-D1164
D	M6 x 16mm thumb screws	4	560-1397	560-1397	560-1397	560-1397
E	4mm T-wrench	1	560-1718	560-1718	560-1718	560-1718
F	4mm driver bit	1	560-1133	560-1133	560-1133	560-1133
G	drain plug	10	560-0923	560-0923	560-0923	560-0923
H	USB extension cable (not shown)	1	600-0435	600-0435	600-0435	600-0435

A (1)
overlay

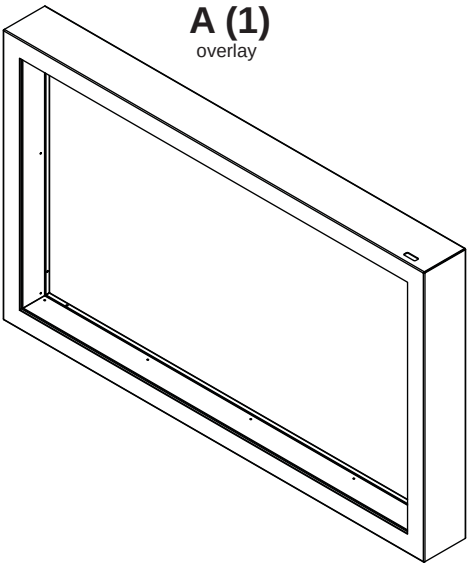

B (4)
corner bracket

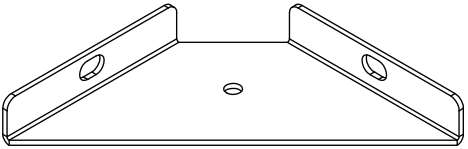

C (8)
M5 x 10mm



D (4)
M6 x 16mm thumb screw

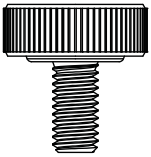

E (1)
4mm T-wrench



F (1)
4mm driver bit

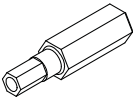

G (10)
drain plug



1

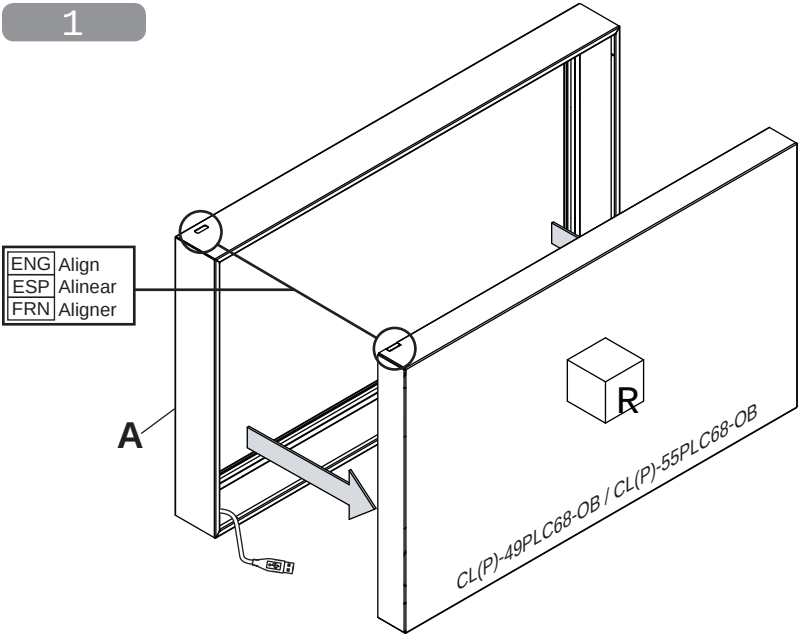
ENG Align
ESP Alinear
FRN Aligner
A
R
CL(P)-49PLC68-OB / CL(P)-55PLC68-OB

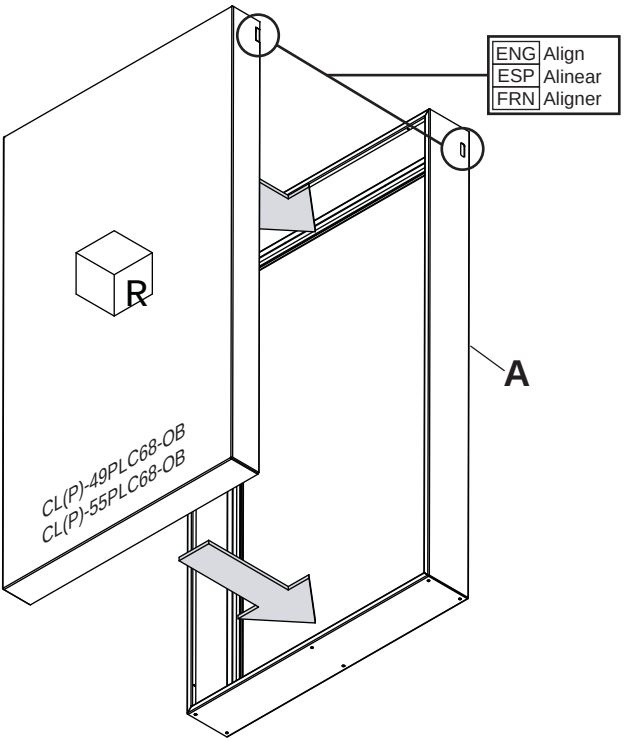
ENG Align
ESP Alinear
FRN Aligner
R
A
CL(P)-49PLC68-OB
CL(P)-55PLC68-OB

2

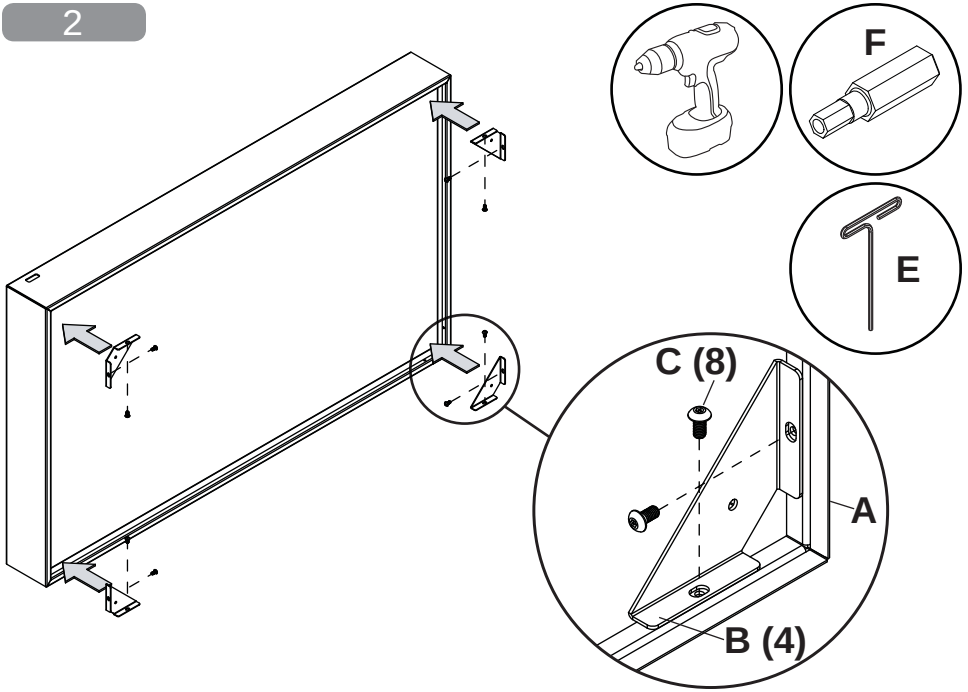

3

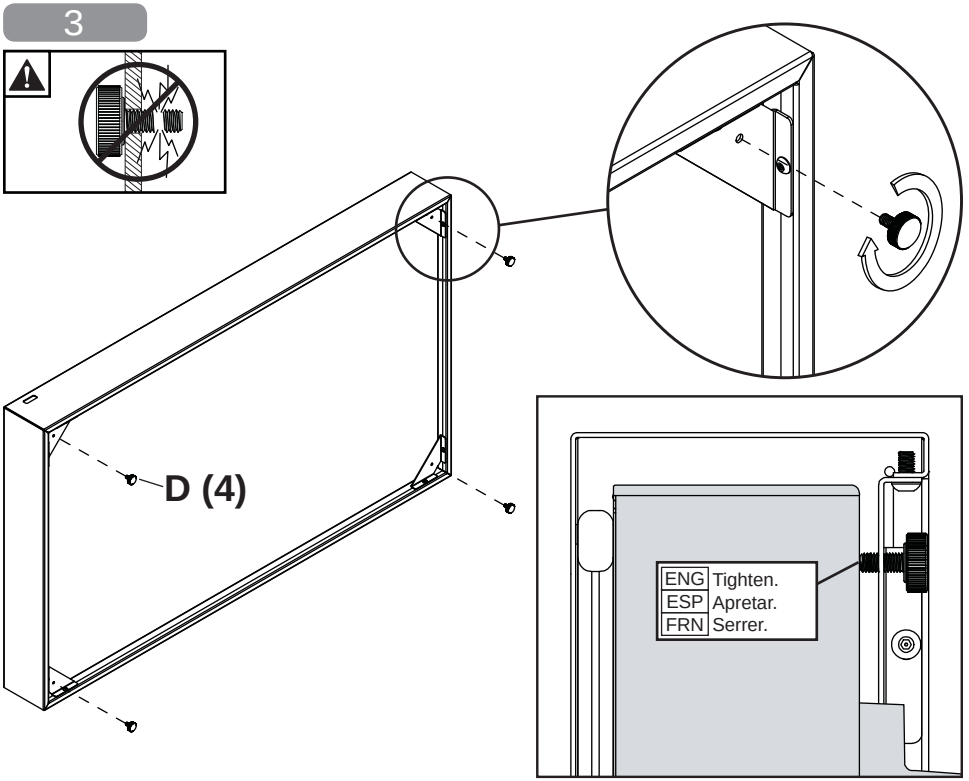

4

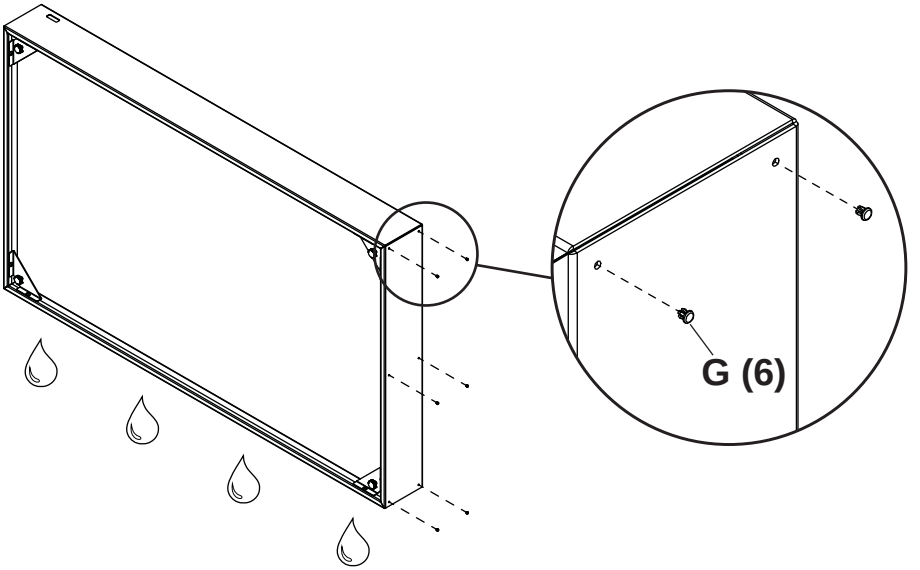

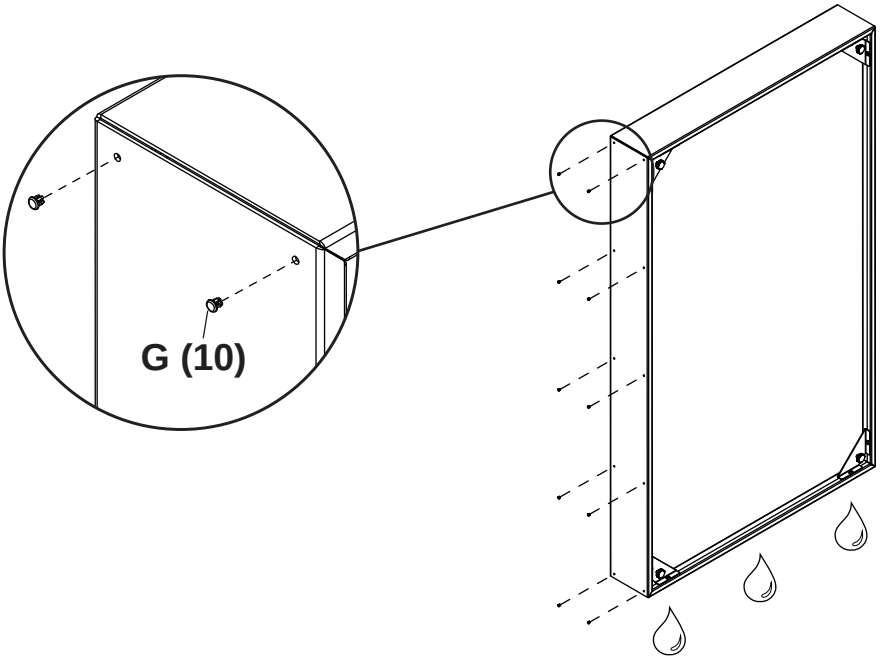

5

ENG Connect source device, and waterproof USB extensions with electrical tape or heat-shrinking tube.

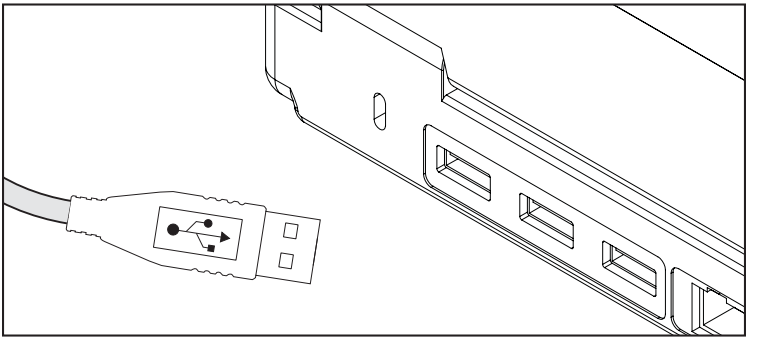

6a

ENG Windows Calibration Instructions

For most operating systems and display orientations calibration is not required. If the touch points are not being registered accurately please follow the instructions below for calibrating your IR Touch Overlay. You will need to connect a mouse until your IR Touch Overlay is calibrated properly.

1. Please go to the following website xxxx and download the calibration software for the operating system that you are using.

2. Plug the USB from the IR Touch Overlay into the computer or media player that is being used.

3. Install the software on the computer or media player being used with the IR Touch Overlay.

4. Open the Zaagtech Multi-Touch software.

5. Select the language of your choice.

6. Select “Agree” on the License Agreement Page.

7. A prompt will appear to install the Universal Serial Bus Controllers. Check the box that says “Always trust software from Multi-Touch Surface Inc.” and then click “Install”. After the installation is complete it will automatically launch the software. Restart the connected pc or windows based media player.

8. Using your connected mouse open the ZinFrame Panel Software by either selecting the shortcut placed on the desktop or by going to the Start Menu, applications, ZaagTech and then clicking on the ZinFrame Panel icon.

9. Click on the “Calibration” button.

10. Spinning targets will appear on the screen. Touch and hold the spinning targets until they stop spinning and display the next target. After all targets have registered it will take you back to the main screen in the software.

11. If your connected pc or Windows based media player supports multi-touch, leave the HID Windows Icon at the top menu selected and then click “Ok” at the bottom of your configuration panel. If your pc or Windows based media player only supports single touch, click the mouse button in the top menu of the ZinFrame Panel software and then click “Ok” at the bottom of the calibration panel. Touch on your desktop to make sure that the touches are registering accurately. If the touches are registering accurately the calibration process is completed. If they are not registering accurately restart the connected pc or Windows based media player. Once fully booted verify that the touches are registering accurately. If they are still not registering accurately please contact Peerless-AV Customer Care at 800-865-2112 and ask to speak with one of our "PeerTech Pros" for further assistance.

ENG Mac Calibration Instructions

For most operating systems and display orientations calibration is not required. If the touch points are not being registered accurately please follow the instructions below for calibrating your IR Touch Overlay. You will need to connect a mouse until your IR Touch Overlay is calibrated properly.

1. Please go to the following website xxxx and download the calibration software for the operating system that you are using.

2. Plug the USB from the IR Touch Overlay into the computer or media player that is being used.

3. Install the software on the computer or media player being used with the IR Touch Overlay.

4. Open the Zaagtech Multi-Touch software.

5. If the Zaagtech Multi-Touch software is not detecting the IR Touch Overlay, please restart your computer or media player.

6. Once the computer or media player is rebooted all touches should be registering accurately. If this is not the case please open the Zaagtech Multi-Touch Software and click on calibration.

7. Spinning targets will appear on the screen. Touch and hold the spinning targets until they stop spinning and display the next target. After all targets have registered it will take you back to the main screen in the software.

8. If the connected Mac or Mac OS based media player support multi-touch, Click “Ok” at the bottom of the calibration panel. If the connected Mac or Mac OS based media player only supports single touch, click the mouse button in the top menu of the Zaagtech Multi-Touch software and then click “Ok” at the bottom of the calibration panel. Touch on the desktop to make sure that the touches are registering accurately. If the touches are registering accurately the calibration process is complete. If the touches are not registering accurately restart the connected restart the connected Mac or Mac OS based media player. Once fully booted verify that the touches are registering accurately. If the touches are still not registering accurately please contact Peerless-AV Customer Care at 800-865-2112 and ask to speak with one of our “PeerTech Pros” for further assistance.

ENG This page intentionally left blank.
ESP Página en blanco.
FRN Cette page a été laissée en blanc intentionnellement.

LIMITED TWO-YEAR WARRANTY

TWO-YEAR PARTS & LABOR LIMITED WARRANTY

Terms of Peerless-AV®

The Peerless-AV IR touch overlay is warrantied to be free of defects in material and workmanship from the time of purchase by the original owner. If this product is found and proved to be defective under the terms and conditions of this warranty, Peerless-AV will repair or replace defective parts with new and/or reconditioned parts at no charge for the parts and labor to the original owner, subject to the terms and conditions of this Limited Warranty. This Limited Warranty covers failures due to defects in material and workmanship that occur during normal residential or commercial use as follows:

- Parts – the warranty period for parts is: two (2) years from the date of original purchase. During the applicable Limited Warranty period for parts, defective parts will be replaced at no charge. Parts used for the replacement will be warranted for the remainder of the original warranty period for those parts.
- Labor – the warranty period for labor is: two (2) years from the date of original purchase. During the applicable Limited Warranty period for labor, Peerless-AV will provide the labor for warranty repair at no charge for a period of two (2) years from the date of original purchase.
- Original owner must provide verification of the date of purchase when requesting Limited Warranty Services. A copy of the original Dated Sales Receipt is required together with the product to obtain service under this Limited Warranty.
- All repairs must be performed by a Peerless-AV Authorized Service Provider.
- Customer is responsible for returning (including any freight and shipping costs) defective unit to a Peerless-AV Authorized Service Provider. If the product is found to have no defects, the customer will be responsible for return shipping costs as well.

THIS LIMITED WARRANTY DOES NOT COVER:

- Labor to uninstall and reinstall the IR touch overlay
- Shipping damage.
- Damage caused during customer unpacking, and/or removal of packing materials.
- Damage due to power surges or lightning strikes.
- Damages which results from fire, flood, lightning, tornado, hurricane, large hail, extremely gusty winds, sand storms, vandalism, terrorism or other acts of nature.
- Any unit which has been modified or damaged due to improper installation or failure to obey the operating instructions in the User Manual.
- Any failure, loss, damage or personal injury due to accident, neglect, misuse, abuse, improper orientation, improper maintenance, improper storage, alteration to the unit, or failure by the consumer to follow operating instructions provided by the user manual.
- Any owner other than the original owner.
- Any unit purchased from an unauthorized seller.
- If the original product serial number has been removed, defaced or tampered with in any way.
- Any packaging or transportation charges incurred in connection with warranty services.
- Indirect, consequential, or special damages except as required by federal or state laws.
- Any unit tampered with, modified, adjusted or repaired by any party other than the Peerless-AV Authorized Service Provider.
- Any cosmetic damages to the surface or exterior that has been defaced or faded, or caused by normal wear and tear or exposure to chemicals, acid rain, large hail or adverse weather conditions.
- Return shipping when no defect is found.

Peerless-AV and its representatives or agents shall in no event be liable for any general, indirect or consequential damages arising out of/or caused by the use of /or the inability to use this product.

This warranty is made in lieu of all other warranties, expressed or implied, and all other liabilities on the part of Peerless-AV. Any other warranties, including the warranties of merchantability and fitness for a particular purpose are hereby disclaimed by Peerless-AV and its representatives and/or agents.

All warranty inspections and repairs must be performed by Peerless-AV or its authorized service representations.

Customer Care: 800.865.2112 or 630.375.5100
Website: www.peerless-av.com

© 2017 Peerless Industries, Inc. All rights reserved.

Peerless-AV
2300 White Oak Circle
Aurora, IL 60502
Email: tech@peerlessmounts.com
Ph: (800) 865-2112
Fax: (800) 359-6500
www.peerless-av.com

© 2017, Peerless Industries, Inc.

Peerless-AV Europe
Unit 3 Watford Interchange,
Colonial Way, Watford, Herts,
WD24 4WP, United Kingdom
Customer Care
44 (0) 1923 200 100
www.peerless-av.com

© 2017, Peerless Industries, Inc.

Peerless-AV de Mexico
Ave de las Industrias 413
Parque Industrial Escobedo
Escobedo N.L Mexico 66050
Servicio al Cliente
01-800-849-65-77
www.peerless-av.com

© 2017, Peerless Industries, Inc.