LTR	REV.	DESCRIPTION	DATE	APP'D

RoHS-COMPLIANT

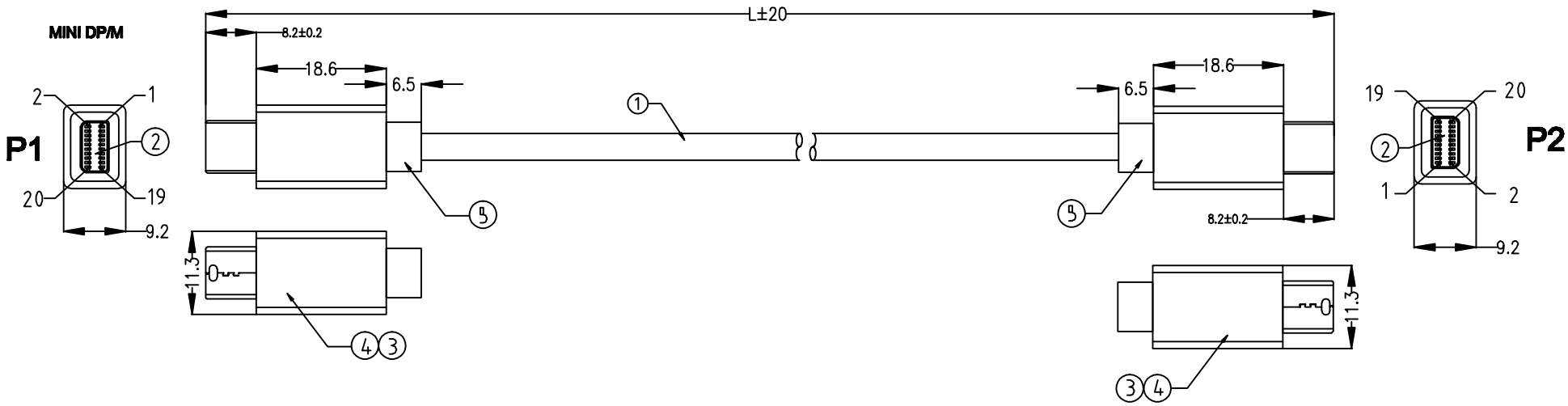

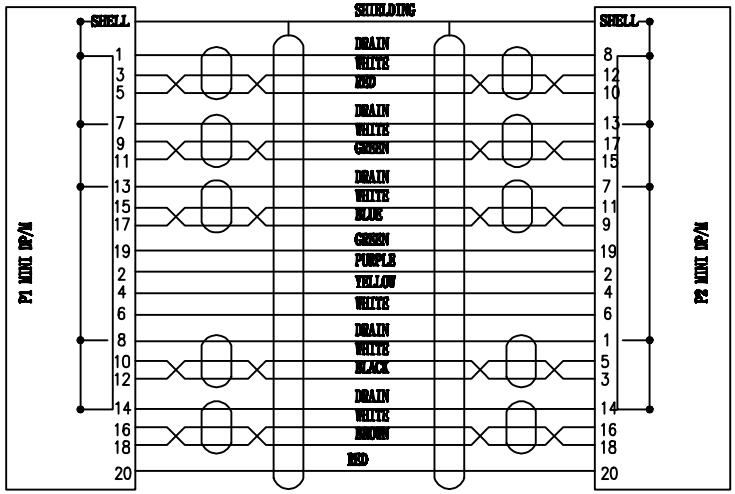

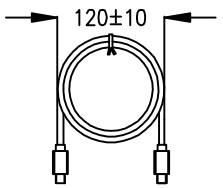

Item	L(M)
AK3954	0.5
AK3959	1.0
AK3960	1.5
AK3961	2.0

ELECTRICAL TEST:

1. 100% OPEN SHORT MIS WIRE TEST
2. CONTACT RESISTANCE:3 OHM MAX
3. INSULATION RESISTANCE:10M OHM MIN
4. HI-POT TEST:DC 300V/10ms
5. Displayport version: 1.2v
6. Max Resolution: 3840*2160

NO.	NAME	SPEC	Q'TY	REMARK
5	MOLD	WHITE 45P PVC	A/R	
4	MOLD	LDPE, NATURAL COLOR	A/R	
3	SHELL	MINIDP/M WHITE PVC FRONT COVER SHELL	2	
		MINIDP/M WHITE PVC COVER SHELL	2	
2	PLUG	MDP 20P/M; PIN G/F, STELL SHELL G/F, WHITE PVC CORE	2	
1	CABLE	UL20276 #30*5P+#30*5C+AEB, BLACK PVC JACKET, OD:5.0mm L=500/1000/1500/2000mm	1	

ITEM: MINI DP M TO MINIDP M CABLE

C.T | C.T ITEM

Tol.	Inch	mm	UNIT	mm	DRAWING:	HUANG
X.	.02	0.5	ANGLE	±	CHECK 1:	
X.X	.12	0.3	SCALE	NONE	CHECK 2:	
X.XX	.008	0.2	FONT	NONE	CHECK 3:	
X.XXX	.006	0.15	The third perspective		DATE	2015-09-23
X.XXX	.006	0.15			VER. A	PAGE 1/1

LTR	REV.	DESCRIPTION	DATE	APP'D

RoHS-COMPLIANT

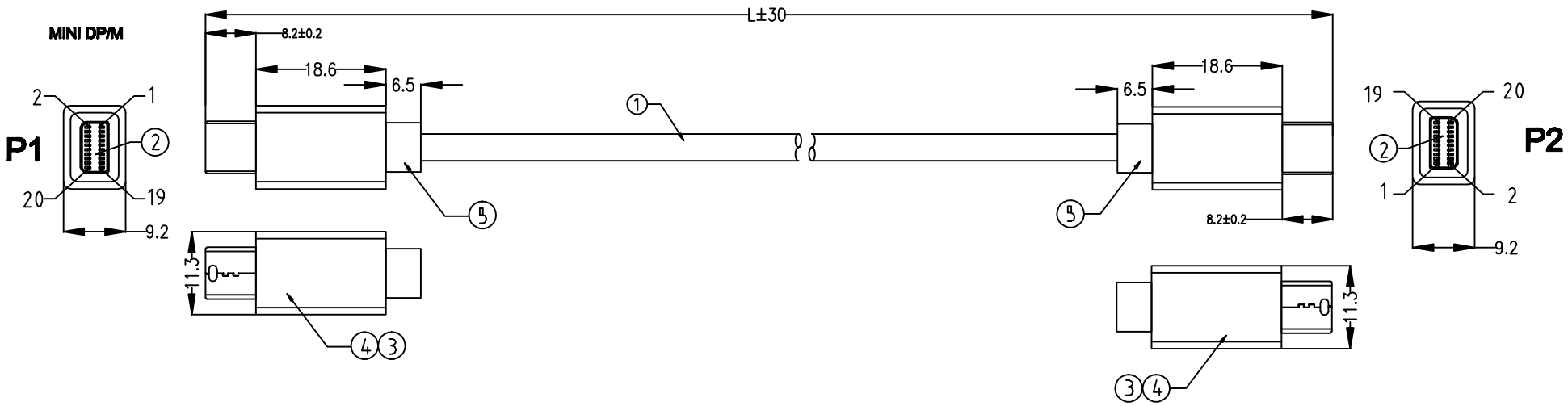

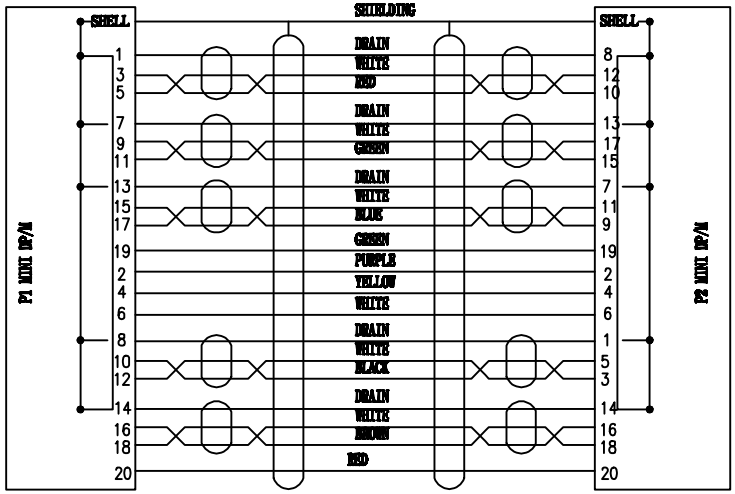

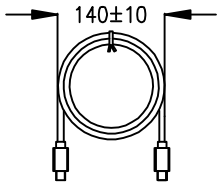

Item	L(M)
AK3962	3.0
AK3969	5.0

ELECTRICAL TEST:

1. 100% OPEN SHORT MIS WIRE TEST
2. CONTACT RESISTANCE:3 OHM MAX
3. INSULATION RESISTANCE:10M OHM MIN
4. HI-POT TEST:DC 300V/10ms - -
5. Displayport version: 1.2v
6. Max Resolution: 3840*2160

NO.	NAME	SPEC	Q'TY	REMARK
5	MOLD	WHITE 45P PVC	A/R	
4	MOLD	LDPE, NATURAL COLOR	A/R	
3	SHELL	MINIDP/M WHITE PVC FRONT COVER SHELL	2	
		MINIDP/M WHITE PVC COVER SHELL	2	
2	PLUG	MDP 20P/M: PIN G/F, STELL SHELL G/F, WHITE PVC CORE	2	
1	CABLE	UL20276 #30*5P+#30*4C+26#*1C+AEB, BLACK PVC JACKET, OD:5.5mm L=3050/5000mm	1	

ITEM: MINI DP M TO MINIDP M CABLE

C.T | C.T ITEM

Tol.	Inch	mm	UNIT	mm	DRAWING:	HUANG
X.	.02	0.5	ANGLE	±	CHECK 1:	
X.X	.12	0.3	SCALE	NONE	CHECK 2:	
X.XX	.008	0.2	FONT	NONE	CHECK 3:	
X.XXX	.006	0.15	The third perspective		DATE	2015-09-23
X.XXX	.006	0.15			VER. A	PAGE 1/1