Product data sheet
Characteristics

XUK1ARCNL2H61
photo-electric sensor - XUK - reflex - kit - Sn 7m - 24..240VAC/DC - cable 2m



Main

Range of product	OsiSense XU
Series name	Application tertiary sector
Electronic sensor type	Photo-electric sensor
Product specific application	Access detection
Sensor name	XUK
Sensor design	Compact 50 x 50
Additional information	French/German leaflet
Material	Plastic
Detection system	Reflex
Emission	Infrared reflex
[Sn] nominal sensing distance	7 m with 50 x 50 mm reflector
Wiring technique	5-wire
Cable length	2 m

Complementary

Kit composition	50 x 50 mm reflector Fixing bracket Mounting instructions Reflex system photo-electric sensor
Enclosure material	PBT
Lens material	PMMA
Type of output signal	Discrete
Output type	Relay
Discrete output type	1 C/O
Output function governance	Light
Electrical connection	Cable
Wire insulation material	PVC
Status LED	1 LED for output state
Supply circuit type	AC/DC
[Us] rated supply voltage	24...240 V AC/DC with reverse polarity protection
Supply voltage limits	20...264 V AC/DC
Output voltage	250 V AC

Disclaimer: This documentation is not intended as a substitute for and is not to be used for determining suitability or reliability of these products for specific user applications

Switching capacity in mA	3 A
Switching frequency	< 20 Hz
Power consumption in W	2 W
Delay first up	<= 60 ms
Delay response	<= 25 ms
Delay recovery	<= 25 ms
Product weight	0.3 kg

Environment

Product certifications	CE CSA UL
Ambient air temperature for operation	-25...55 °C
Ambient air temperature for storage	-40...70 °C
Vibration resistance	7 gn, amplitude = +/- 1.5 mm (f = 10...55 Hz) conforming to IEC 60068-2-6
Shock resistance	30 gn (duration = 11 ms) conforming to IEC 60068-2-27
IP degree of protection	IP65 (double insulation) conforming to IEC 60529

Offer Sustainability

RoHS (date code: YYWW)	Compliant - since 1717 - Schneider Electric declaration of conformity Schneider Electric declaration of conformity

XUK1ARCNL2H61

Dimensions

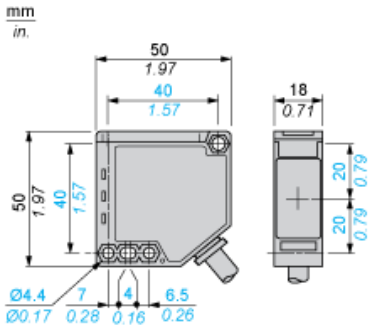

Mounting Precautions

Rigid Fixing for Trouble Free Detection

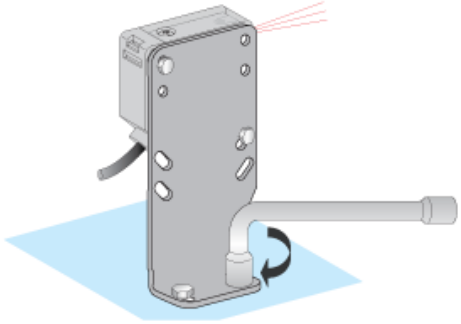

Outdoor Mounting under Protective Cover

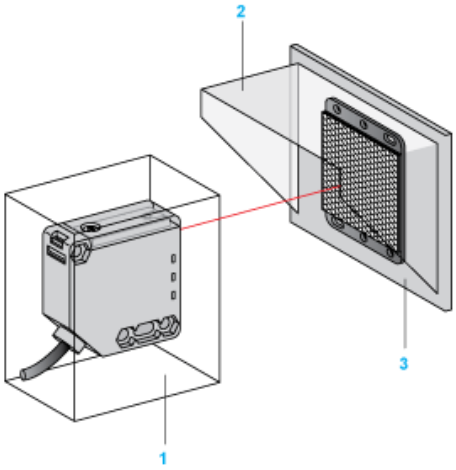

(1) Protective housing
(2) Lens hood
(3) Thermal insulator to avoid frost or condensation forming on the optical parts

Wiring Schemes

5-Wire AC or DC

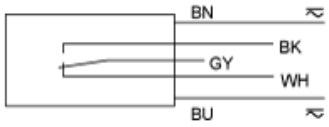

BN : Brown
WH : White
BU : Blue
BK : Black
GY : Grey

XUK1ARCNL2H61

Detection Curves

Reflex System AC or DC

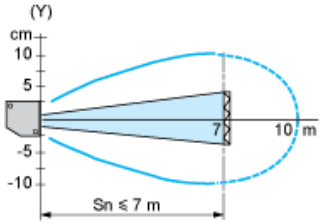

(y) Ø of beam (cm)

Life Is On Schneider Electric

Detection Curves

Reflex System AC or DC

With reflector XUZC50

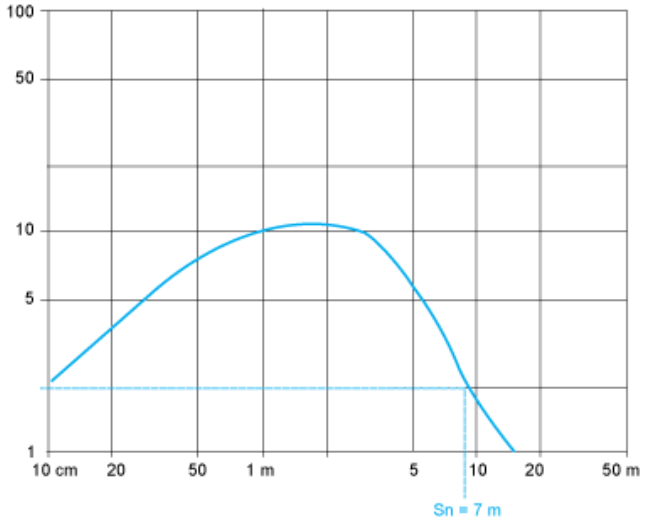

(y) Gain