

MASTER LEDspot LV

MAS LEDspotLV DimTone 6.5-35W MR16 36D

Delivering a warm, halogen-like accent beam, MASTER LEDspot LV is an ideal retrofit solution for spot and general lighting applications in the hospitality industry. It is particularly suited to public areas such as receptions, lobbies, corridors, stairwells and washrooms, where the light is on all the time.The robustly designed MASTER LEDspot offers a choice of beam angles for a clearly defined beam spread. There is no UV or IR in the beam, making it suitable for illuminating heat-sensitive objects (food, organic materials, paintings, etc.).The patented intelligent driver enables broad compatibility with existing electromagnetic and electronic halogen transformers. The dimmable versions drive further efficiencies, while helping to create the desired atmosphere.

Product data

• General Information

Cap-Base	GU5.3 [GU5.3]
Bulb Shape	MR16 [2inch/50mm]
Nominal Lifetime (Nom)	25000 h
Switching Cycle	50000X
Technical Type	6.5-35W

• Light Technical

Color Code	822-827 [tunable warm white]
Beam Angle (Nom)	36 °
Light Distribution	Medium beam 36°
Luminous Flux (Nom)	410 lm
Luminous Flux (Rated) (Nom)	410 lm
Luminous Intensity (Nom)	900 cd
Color Designation	Warm White (WW)
Rated Beam Angle	36 °
Correlated Color Temperature (Nom)	2200-2700 K
Luminous Efficacy (rated) (Nom)	63.08 lm/W
Color Consistency	<6
Color Rendering Index (Nom)	80
LLMF At End Of Nominal Lifetime (Nom)	70 %
Luminous Flux In 90° Cone (Rated)	370 lm

• Operating and Electrical

Input Frequency	50 to 60 Hz
Power (Rated) (Nom)	6.5 W
Lamp Current (Nom)	800 mA
Wattage Equivalent	35 W
Starting Time (Max)	0.5 s
Warm Up Time To 60% Light (Nom)	instant full light
Power Factor (Nom)	0.7
Voltage (Nom)	12 V

• Controls and Dimming

Dimmable	Yes

• Approval and Application

Suitable For Accent Lighting	Yes
Energy Efficiency Label (EEL)	A
Energy Consumption kWh/1000 h	7 kWh

• Product Data

Full product code	871869644215900
Order product name	MAS LEDspotLV DimTone 6.5-35W MR16 36D
EAN/UPC - Product	8718696442159

PHILIPS

MASTER LEDspot LV

Order code	929001127902
Numerator - Quantity Per Pack	1
Numerator - Packs per outer box	10

Material Nr. (12NC)	929001127902
Net Weight (Piece)	0.045 kg

Warnings and Safety

- Operating temperature range is between -20° C and 45° C ambient
- Only to apply in dry or damp locations and most of open fixtures with lamp-holders that offer sufficient space (10 mm free air space)
- Not intended for use with emergency light fixtures or exit lights

Dimensional drawing

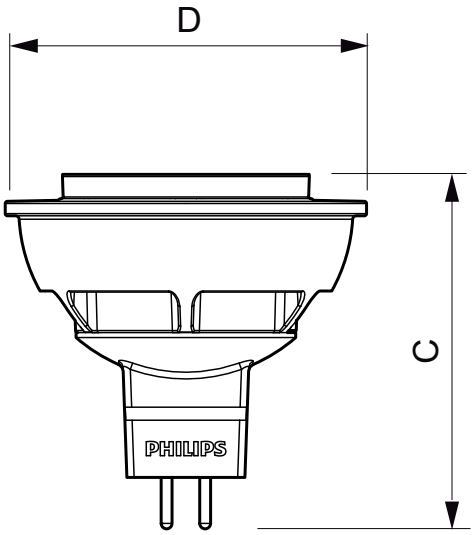

3.4-20W, 5.5-35W, 5.5-50W, 6.3-35W, 6.5-35 W GU5.3 MR16

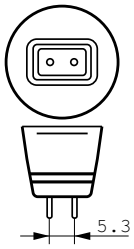

MR16 12V 7W-35W 36D 2700K GU5.3 Dimtone

Product	D	C
MAS LEDspotLV DimTone 6.5-35W MR16 36D	51 mm	50 mm

Photometric data

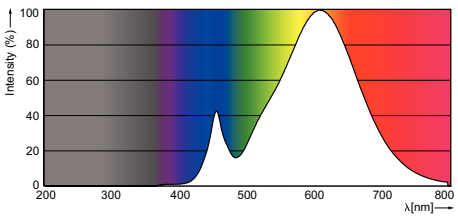



© 2016 Philips Lighting Holding B.V.
All rights reserved.

Specifications are subject to change without notice. Trademarks are the property of Koninklijke Philips N.V. (Royal Philips) or their respective owners.

www.philips.com/lighting

2016, October 26
data subject to change