

LogiLink®

USB Table Charger
4 Port, 22W

Art. No.: **PA0138**

Best connectivity

PA0138 provides multiple charging solution for households and office. It will solve the need to charge multiple electronics simultaneously, bringing the convenience to your life.

Features:

» Input: 100-240V AC
» Output: 5V4.4A (22W) max
» Supports: OCP, OVP, short circuit protection
» Built in intelligent IC, compatible with iPhone/iPad/ mobile devices/Tablet PC/power banks and other 5V devices
» LED indication
» Able to charge 4 devices at the same time
» Suitable for family gatherings, office meetings and school's classrooms



Specification:

Input	100-240VAC 50/60Hz
Output	5V2.4A x4 (4.4A max)
Ripple & Noise	≤200mV
USB Port	4 ports
Efficiency	79.28%
Turn On Delay Time	3s max
Operating Temperature Range	0~40°C
Storage Temperature Range	-20°C ~ 80°C
Operating Relative Humidity	5% ~ 90% RH
Color	Black
Dimension	92.4 x 57.4 x 29.4mm
Weight	185g

RoHS compliant

* The specifications and pictures are subject to change without notice.
*All trade names referenced are the registered namework of their respective owners.

PA0138
4 052792 041620
Made in China

LogiLink®



USB Table Charger
4 Port, 22W

Art. No.: **PA0138**

Best Connectivity



Package Contents:
» 1 x USB Table Charger
» 1 x Power Cable
» 1 x User Manual

Package Informations:
» Packing Dimension: 135 x 115 x 35mm
» Packing Weight: kg
» Carton Dimension: 567 x 370 x 240mm
» Carton Q'ty: 80pcs
» Carton Weight: kg

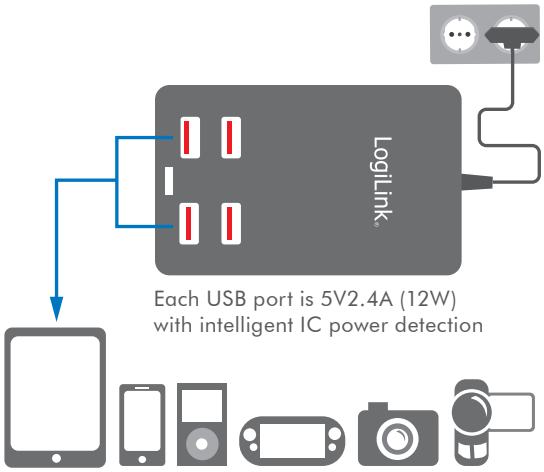

Each USB port is 5V2.4A (12W)
with intelligent IC power detection

RoHS compliant

* The specifications and pictures are subject to change without notice.
*All trade names referenced are the registered namework of their respective owners.

PA0138
4 052792 041620
Made in China