DH-SD6CA230TN-HN(I)

2Mp Full HD 30x Network IR PTZ Dome Camera



Features

- 30x optical zoom
- Support Triple-streams encoding
- Max. 30fps@1080P(1920×1080) & 60fps@720P resolution
- DWDR, Day/Night(ICR), Ultra DNR, Auto iris, Auto focus
- Multiple network monitoring: Web viewer, CMS(DSS/PSS) & DMSS
- Max 240°/s pan speed, 360° endless pan rotation
- Up to 300 presets, 5 auto scan, 8 tour, 5 pattern
- Built-in 2/1 alarm in/out
- Support intelligent 3D positioning with DH-SD protocol
- Micro SD memory, IP66
- IR Distance up to 100m

DH-SD6CA230TN-HN(I)

Technical Specifications

Model	DH-SD6CA230TN-HN(I)
Camera	
Image Sensor	1/2.8" Exmor CMOS
Effective Pixels	1920(H) x 1080(V)
Scanning System	Progressive
Electronic Shutter Speed	1/1 ~ 1/30,000s
Min. Illumination	Color: 0.05Lux@F1.6; B/W: 0.005Lux@F1.6
S/N Ratio	More than 50dB
Video Output	BNC(1.0Vp-p/75Ω), PAL / NTSC
Camera Features	
Day/Night	Auto(ICR) / Color / B/W
Backlight Compensation	BLC / HLC / DWDR (Digital WDR)
White Balance	Auto, ATW, Indoor, Outdoor, Manual
Gain Control	Auto / Manual
Noise Reduction	Ultra DNR (2D/3D)
Privacy Masking	Up to 24 areas
Digital Zoom	16x
Lens	
Focal Length	4.5mm~135mm (30x Optical zoom)
Max Aperture	F1.6 ~ F4.4
Focus Control	Auto / Manual
Angle of View	H: 67.8° ~ 2.77°
Close Focus Distance	100mm~ 1000mm
PTZ	
Pan/Tilt Range	Pan: 0° ~ 360° endless; Tilt: -15° ~ 90°, auto flip 180°
Manual Control Speed	Pan: 0.1° ~160° /s; Tilt: 0.1° ~120° /s
Preset Speed	Pan: 240° /s; Tilt: 200° /s
Preset	300
PTZ Mode	5 Pattern, 8 Tour, Auto Pan, Auto Scan
Speed Setup	Human-oriented focal length/ speed adaptation
Power up Action	Auto restore to previous PTZ and lens status after power failure
Idle Motion	Activate Preset/ Pan/ Scan/ Tour/ Pattern if there is no command in the specified period
Protocol	DH-SD, Pelco-P/D (Auto recognition)
IR Distance	100m (2 near IR LED+ 4 far IR LED)
Video	
Compression	H.264H/H.264B/H.264/ MJPEG
Resolution	1080P(1920×1080) / 720P(1280×720) / D1(704×576/ 704×480) /CIF

DH-SD6CA230TN-HN(I)

		(352×288/352×240)
Frame Rate	Main Stream	1080P/ D1 (1 ~ 30fps), 720P(1~60fps)
	Sub Stream 1	D1/CIF(1 ~ 30fps)
	Sub Stream 2	720P/D1/ CIF (1 ~ 30fps)
Bit Rate		H.264: 56K ~ 8192Kbps, MJPEG: 56K ~ 20480Kbps
Audio		
Compression		G.711a / G.711u(32kbps)/ PCM(128kbps)
Interface		1/1 channel In/Out
Intelligent Function (only for "-HNI" model)		
IVS		Tripwire, Intrusion, Abandoned Object Detection, Missing Object Detection,
Face Detection		Support
Network		
Ethernet		RJ-45 (10/100Base-T)
Protocol		IPv4/ IPv6, HTTP, HTTPS, SSL, TCP/IP, UDP, UPnP, ICMP, IGMP, SNMP, RTSP, RTP, SMTP, NTP, DHCP, DNS, PPPOE, DDNS, FTP, IP Filter, QoS, Bonjour, 802.1x
Compatibility		ONVIF PSIA CGI
Max. User Access		20 users
Smart Phone		iPhone, iPad, Android, Windows Phone
Auxiliary Interface		
Memory Slot		Micro SD, Max 128GB
RS485		1
Alarm		2/1 channel In/Out
General		
Power Supply		AC 24V/3A
Power Consumption		10.5W, 26W (IR on, Heater on)
Working Environment		-40°C ~ 60°C / Less than 90% RH
Ingress Protection		IP66
Dimensions		Φ204.7(mm) x 359.9(mm)
Weight		5kg

DH-SD6CA230TN-HN(I)

Dimensions (mm)

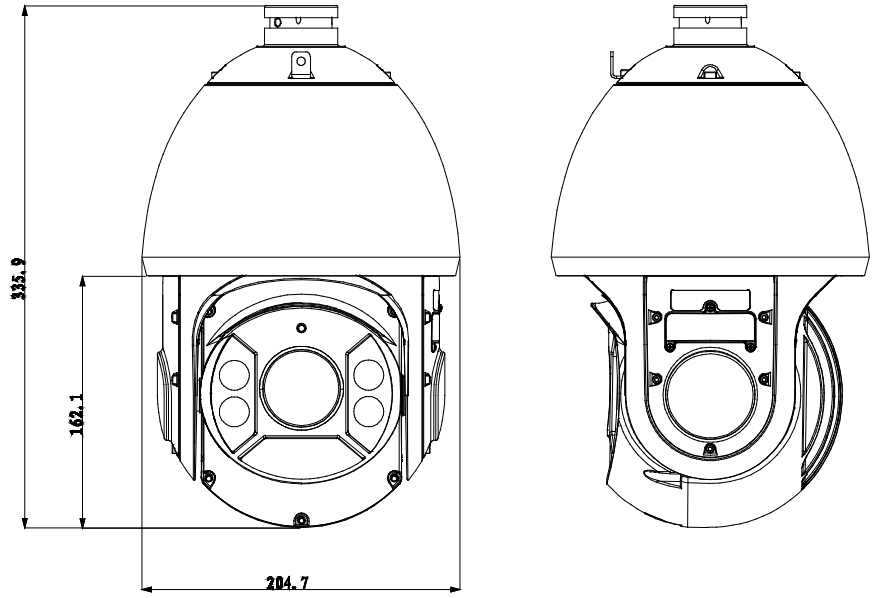

Accessories

	
64FB	Power Supply

DH-SD6CA230TN-HN(I)

Accessories (Optional)

					
PFB300C	PFA112	PFA113	PFA120	PFA150	PFA151