DH-SD50A230TN-HN(I)

2MpFull HD 30xUltra-high SpeedNetwork PTZ Dome Camera



Features

- 30xoptical zoom
- Support Triple-streams encoding
- Max. 30fps@1080P(1920×1080) &60fps@720Presolution
- DWDR,Day/Night(ICR), Ultra DNR, Auto iris, Auto focus
- Multiple network monitoring: Web viewer, CMS(DSS/PSS) & DMSS
- Max 500°/s pan speed, 360° endless pan rotation
- Up to 300 presets, 5 auto scan, 8 tour, 5 pattern
- Built-in 2/1 alarm in/out
- Support intelligent 3D positioning with DH-SD protocol
- Micro SD memory, IP67, IK10

DH-SD50A230TN-HN(I)

Technical Specifications

Model		DH-SD50A230TN-HN(I)
Camera		
Image Sensor		1/2.8"ExmorCMOS
Effective Pixels		1920(H) x 1080(V), 2Megapixels
Scanning System		Progressive
Electronic Shutter Speed		1/3 ~ 1/30,000s
Min. Illumination		Color: 0.05Lux@F1.6; B/W: 0.005Lux@F1.6
S/N Ratio		More than 55dB
Camera Features		
Day/Night		Auto(ICR) / Color / B/W
Backlight Compensation		BLC / HLC / DWDR(Digital WDR)
White Balance		Auto, ATW, Indoor, Outdoor, Manual
Gain Control		Auto / Manual
Noise Reduction		Ultra DNR (2D/3D)
Privacy Masking		Up to 24 areas
Digital Zoom		16x
Lens		
Focal Length		4.5mm~135mm (30x Optical zoom)
Max Aperture		F1.6~ F4.4
Focus Control		Auto / Manual
Angle of View		H: 67.8° ~ 2.77°
Close Focus Distance		100mm~1000mm
PTZ		
Pan/Tilt Range		Pan: 0° ~ 360°endless;Tilt: 0° ~ 90°, auto flip 180°
Manual Control Speed		Pan: 0.1° ~350° /s;Tilt: 0.1° ~250° /s
Preset Speed		Pan:500° /s;Tilt: 500° /s
Preset		300
PTZ Mode		5 Pattern, 8 Tour, Auto Pan,Auto Scan
Speed Setup		Human-oriented focal length/ speed adaptation
Power up Action		Auto restore to previous PTZ and lens status after power failure
Idle Motion		Activate Preset/Pan/Scan/Tour/Pattern if there is no command in the specified period
Protocol		DH-SD(Auto recognition)
Video		
Compression		H.264 / MJPEG
Resolution		1080P(1920×1080)/720P(1280×720)/D1(704×576/704×480) /CIF (352×288/352×240)
Frame Rate	Main Stream	1080P/ D1 (1 ~ 30fps), 720P(1~60fps)

DH-SD50A230TN-HN(I)

	Sub Stream 1	D1/CIF(1 ~ 30fps)
	Sub Stream 2	720P/ D1/ CIF (1 ~ 30fps)
Bit Rate		H.264: 448K ~ 8192Kbps
Audio		
Compression		G.711a / G.711Mu(32kbps)/PCM(128kbps)
Interface		1/1 channel In/Out
Intelligent Function (only for "-HNI" model)		
IVS		Tripwire, Intrusion, Abandoned Object Detection, Missing Object Detection
Face Detection		Support
Network		
Ethernet		RJ-45 (10/100Base-T)
Protocol		IPv4/IPv6, HTTP, HTTPS, SSL, TCP/IP, UDP, UPnP, ICMP, IGMP, SNMP, RTSP, RTP, SMTP, NTP, DHCP, DNS, PPPOE, DDNS, FTP, IP Filter, QoS,
Compatibility		ONVIF PSIA CGI
Max. User Access		20 users
Smart Phone		iPhone, iPad, Android, Windows Phone
Auxiliary Interface		
Memory Slot		Micro SD, Max 128GB
Alarm		2/1channel In/Out
General		
Power Supply		AC24V/1.5A (±10%), POE plus (802.3at)
Power Consumption		13W,23W(Heater on)
Working Environment		-40°C ~ 60°C / Less than 90% RH
Ingress Protection		IP67, IK10
Dimensions		Φ186.0(mm) x 253(mm)
Weight		2.5kg

DH-SD50A230TN-HN(I)

Dimensions (mm)

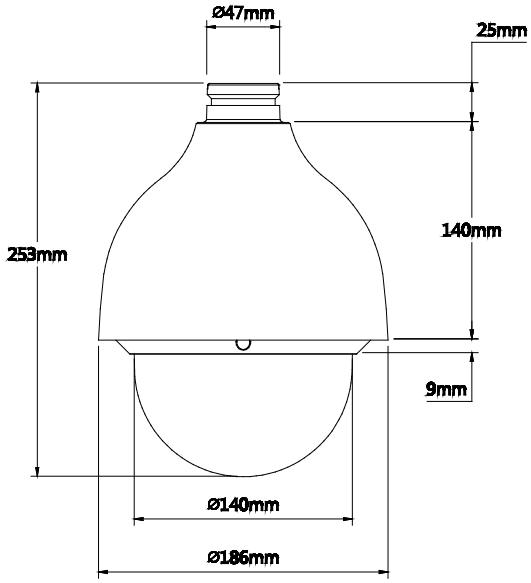

Accessories

		
DH-PFB300S	DH-PFA110	Power Supply

DH-SD50A230TN-HN(I)

Accessories (Optional)

						
DH-PFB 300C	DH-PFA112	DH-PFA113	DH-PFB301 S	DH- PFA120	DH-PFA150	DH-PFA151