DH-IPC-HDBW54A1EN-Z(I)

4MPHD WDR Network Vandal-proof IR Dome Camera



Features

- 1/3" 4Megapixel progressive scan CMOS
- Support H.264&MJPEG dual codec
- Max 20fps@4Mp(2688×1520),30fps@3M(2304x1296)
- Smart Detection supported
- WDR(120dB), Day/Night(ICR), 3DNR,AWB,AGC,BLC
- Multiple network monitoring: Web viewer, CMS(DSS/PSS) & DMSS
- 2.7mm ~12mm motorizedlens
- 1/1 Alarm in/out, 1/1 audio in/out
- Max. IR LEDs Length 50m
- Micro SD memory, IP67, IK10, PoE

DH-IPC-HDBW54A1EN-Z(I)

Technical Specifications

Model		DH-IPC-HDBW54A1EN-Z(I)
Camera		
Image Sensor		1/3"4Megapixel progressive scan CMOS
Effective Pixels		2688(H)x1520(V)
Scanning System		Progressive
Electronic Shutter Speed		Auto/Manual, 1/3(4)~1/100000s
Min. Illumination		0.01Lux/F1.4(Color);0Lux/F1.4(IR on)
S/N Ratio		More than 50dB
Video Output		1 port
Camera Features		
Max. IR LEDs Length		50m
Day/Night		Auto(ICR)/Color/B/W
Backlight Compensation		BLC / HLC /WDR(120dB)
White Balance		Auto/Sunny/Night/Outdoor/Customized
Gain Control		Auto/Manual
Noise Reduction		3D
Privacy Masking		Up to 4 areas
Lens		
Focal Length		2.7mm~12mm
Max Aperture		F1.4
Focus Control		Motorized
Angle of View		H: 100°~33°
Lens Type		Motorized/ Auto Iris(DC)
Mount Type		Board-in Type
Video		
Compression		H.264/H.264H/H.264B/MJPEG
Resolution		4M(2688x1520)/4M(2560x1440)/3M(2304x1296)/1080P(1920x1080)/1.3M(1280×960)/720P(1280×720)/D1(704×576/704×480)/CIF(352×288/352×240)
Frame Rate	Main Stream	4M(1~20fps)/3M(1 ~ 30fps)
	Sub Stream	D1/CIF(1 ~ 30fps)
	Third Stream	720P(1-20fps)
Bit Rate		H.264: 32K ~ 10Mbps
Corridor mode		Support
Audio		
Compression		G.711a/ G.711u/ AAC
Interface		1/1 channel In/Out
Smart Function (Only for –ZI model)		
Smart detection		Tripwire
		Intrusion
		Abandoned/Missing
		Scene Change

DH-IPC-HDBW54A1EN-Z(I)

	Audio detect
	Face detect
Network	
Ethernet	RJ-45 (10/100Base-T)
Wi-Fi	N/A
Protocol	IPv4/IPv6, HTTP, HTTPS, SSL, TCP/IP, UDP, UPnP, ICMP, IGMP, SNMP, RTSP, RTP, SMTP, NTP, DHCP, DNS, PPPOE, DDNS, FTP, IP Filter, QoS, Bonjour, 802.1x
ONVIF	ONVIF,PSIA,CGI
Max. User Access	20users
Smart Phone	iPhone, iPad, Android, Windows Phone
Auxiliary Interface	
Memory Slot	Micro SD, Max 128GB
RS485	N/A
Alarm	1/1 channel In/Out
PIR Sensor Range	N/A
General	
Power Supply	DC12V(AC24V optional),PoE (802.3af)
Power Consumption	Max 10W (with IR on, motorized lens working)
Working Environment	-30°C~+60°C, Less than 95% RH
Ingress Protection	IP67
Vandal Resistance	IK10
Dimensions	Φ159mm×117.9mm
Weight	0.8kg

DH-IPC-HDBW54A1EN-Z(I)

Dimensions (mm)

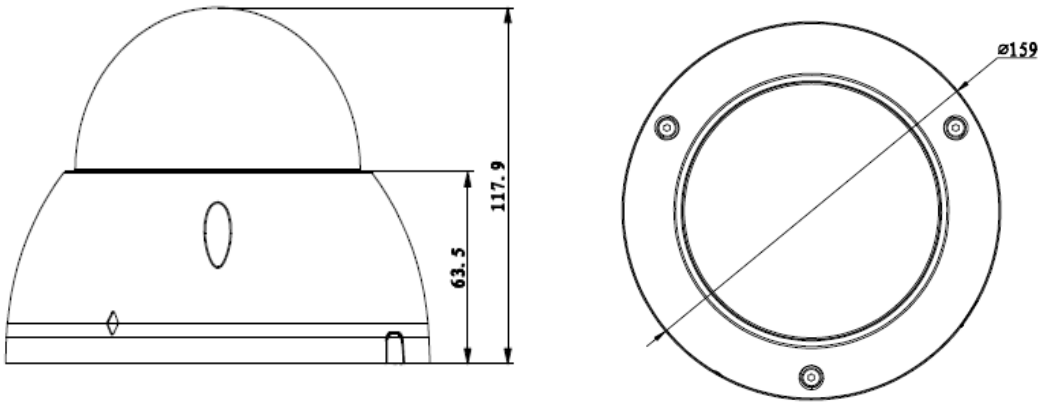

Accessory (optional)

PFA101	PFB302S	PFA152	PFB300C
			