4K Vandal-proof Fisheye

12MP 360° Fisheye Network Camera



- Max 15fps at 12MP (4000x3000), 30fps at 3MP (2048x1536)
- True Day/Night
- Smart IR 10 m (33 ft)
- 2/1 Alarm in/out, 1/1 Audio in/out, Built in Mic
- Outdoor Rated IP67
- Vandal Resistant IK10
- Intelligent Video System (optional)
- Onboard Storage



System Overview

The Megapixel Fisheye camera delivers 12MP resolution. The camera's elegant blend of aesthetics combined with a range of easy mounting solutions provides an excellent choice for a variety of small to mid-size applications.

Functions

Panorama

Dahua's Fisheye cameras allow for a 360-degree hemispherical image that can be dewarped in order to view individual elements separately. In environments that require broad coverage, panoramic cameras can do the job alone where several cameras would be needed otherwise. With a high resolution sensor providing a 360-degree view, blind spots are eliminated. Easy to install on a ceiling or wall, these cameras are well-suited for office buildings, parking garages, gas stations, and retail environments.

True Day/Night

A day/night mechanical IR cut filter makes this camera ideal for applications with fluctuating lighting conditions, delivering color images during the day and automatically switching to monochrome as the scene darkens.

Smart IR

The camera's Smart IR technology adjusts to the intensity of camera's infrared LEDs to compensate for the distance of an object. Smart IR prevents IR LEDS from whiting out images as they come closer to the camera. The camera's integrated IR illumination provides high performance in extreme low-light environments up to 10m (33ft).

Regions of Interest

Regions of Interest (ROI) is a user defined feature that allows the operator to monitor specific areas of a scene while still maintaining overall situational awareness of less important areas.

Intelligent Video System (IVS)

With built-in optional intelligent video analytics, the camera has the ability to detect and analyze moving objects for improved video surveillance. IVS also supports Tripwire analytics, allowing the camera to detect when a pre-determined line has been crossed and Heat map , exporting the daily or hours report that shows the hottest area. Features only available to models ending with the letter "I".

Protection

The camera's outstanding reliability is unsurpassed due to its rugged design. The camera is protected against water and dust to IP67 standards, making it suitable for indoor or outdoor environments. With its IK10 rated impact resistant design, the camera provides maximum durability against vandals making it capable of withstanding the equivalent of 55 kg (120lbs) of force.

Supporting ±25% input voltage tolerance, this camera suits even the most unstable conditions for outdoor applications. Its 8KV lightning rating provides protection against the camera and its structure from the effects of lightning.

Streaming

With a choice of unicast or multicast streaming, bandwidth-efficient viewing, recording and third-party video management can easily be achieved. Multiple streaming enables bandwidth-efficient viewing and recording. Depending on the resolution and frame rate selected on the first stream, the second and third stream provides a copy at a lower resolution.

Technical Specification

Camera

Image Sensor	1/2.3" CMOS
Effective Pixels	4000 (H) x 3000 (V)
ROM / RAM	128MB / 1GB
Scanning System	Progressive
Electronic Shutter Speed	1/3 (4) to 1/100,000s
Minimum Illumination	Color: 0.01 Lux at F2.2; 0 Lux at F2.2 (IR on)
S/N Ratio	More than 50 dB
IR Distance	10 m (33 ft)
IR On/Off Control	Auto / Manual
IR LEDs	3

Lens

Lens Type	Fixed
Mount Type	Board-in
Focal Length	1.57 mm
Max Aperture	F2.0
Angle of View	185°/185°/185°
Focus Control	Fixed

Alarm and Audio

Alarm In/Out	2/1
Audio In/Out	1/1 Channel In/Out (Built in Mic)

Video

Compression	Smart H.265+ / MJPEG
Streaming Capability	2 Streams
Resolution	12MP (4000 × 3000) / 8MP (2880 × 2880)/ 6MP (2880 × 2160) / 3MP (2048 × 1536)
	Main Stream 12MP (1 to 15 fps) / 3MP (1 to 30 fps)
	Sub Stream 1 D1/CIF (1 to 30 fps)
Bit Rate Control	CBR / VBR
Bit Rate	H.264: 40 K to 8192 Kbps
De-wrap Mode	Original, Panoramic, Double Panoramic, 1+3, Eptz, 4 pictures
Day/Night	Auto (ICR) / Color / B/W
BLC Mode	BLC / HLC / DWDR
White Balance	Auto / Manual
Gain Control	Auto / Manual
Noise Reduction	3D DNR
Motion Detection	Off / On (4 Zone, Rectangle)
Region of Interest	Off / On (4 Zone)
Smart IR	N/A
Privacy Masking	Off / On (4 Area, Rectangle)

Intelligent Function

IVS (optional)	Tripewire, Intrusion, Heat map

Network

Ethernet	RJ-45 (10/100Base-T)
Protocol	IPv4/ IPv6, HTTP, HTTPS, SSL, TCP/IP, UDP, UPnP, ICMP, IGMP, SNMP, RTSP, RTP, SMTP, NTP, DHCP, DNS, PPPOE, DDNS, FTP, IP Filter, QoS, Bonjour, 802.1x
Interoperability	ONVIF, PSIA, CGI
Streaming Method	Unicast / Multicast
Max. User Access	20
Edge Storage	NAS (Network Attached Storage), Local PC for instant recording, Micro SD 64GB
Web Viewer	IE10
Management Software	Smart PSS, DSS
Mobile Operating System	Android, IOS

Certifications

Certifications	FCC (SEFD1412194-A) UL (E234884-A51-UL)

Electrical

Power Supply	12V DC ±25%, PoE (af Class 0)
Power Consumption	Max. 13W (12V DC, IR On)

Environmental

Operating Conditions	-30°C to +60°C (-22°F to +140°F) / Less than 90% RH
Storage Conditions	-30°C to +60°C (-22°F to +140°F) / Less than 90% RH
Vandal Resistance	IK10

Construction

Casing	Metal
Dimensions	Φ150 mm × 50.7 mm (5.91 in. x 2.76 in. x 2.0 in)
Net Weight	0.58 kg (1.28 lb)
Gross Weight	0.86 kg (1.90 lb)

Ordering Information

Type	Part Number	Description
12MP Camera	DH-IPC-EBW812A0N	12MP, 1.57mm, DWDR, IK10, PoE
	DH-IPC-EBW812A0N-I	12MP, 1.57mm, DWDR, IK10 , PoE, IVS
Accessories	PFA100	Wall Mount
	PFA132	Junction Box
	PFA152	Pole Mount Bracket (for use with PFA123)
	PFB300C	Ceiling mount(For use with PFA100 wall mount)
	PFB302S	Wall Mount (For use with PFA100 wall mount)

Accessories

Optional:



Junction Mount	Pole Mount
PFA132	**PFA100+PFB302S+PFA152**
	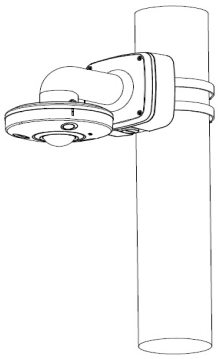
Wall Mount	
PFA100+PFB302S	
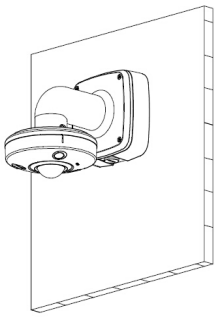	**Ceiling Mount**
	PFA100+PFB300C
	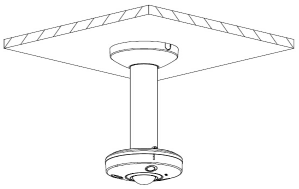

Dimensions (mm/inch)

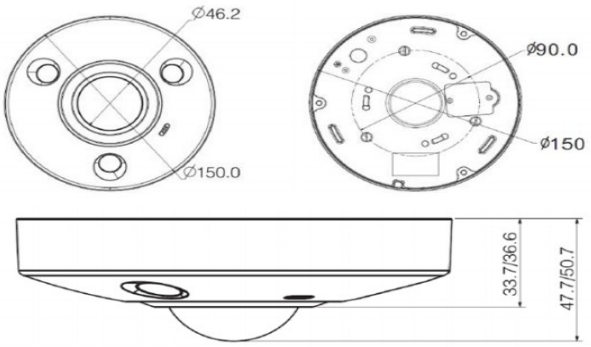

© 2016 Dahua All rights reserved. Design and specifications are subject to change without notice.