DH-HAC-HDBW32A1E-Z

2Megapixel 1080P Starlight HDCVI IR Dome Camera



Features

- 1/2.8" 2.1Megapixel CMOS
- 30fps@1080P, 30/60fps@720P
- High speed, long distance real-time transmission
- HD and SD dual-output (SDI optional), SD Tester out
- OSD Menu, control over coaxial cable
- 120dB True WDR, Day/Night(ICR), AWB, AGC, BLC, 3DNR
- Audio, Alarm
- 2.7~12mm motorized lens, Auto Iris
- Max. IR LEDs length 50m, Smart IR
- IP67, IK10, AC24V/DC12V

DH-HAC-HDBW32A1E-Z

Technical Specifications

Model	DH-HAC-HDBW32A1EN-Z
Camera	
Image Sensor	1/2.8" 2.1Megapixel CMOS
Effective Pixels	1945(H)×1097(V)
Electronic Shutter	1s~1/30,000s
Video Frame Rate	30/60fps@720P; 30fps@1080P
Synchronization	Internal
Min. Illumination	0.005Lux/F1.4, 0Lux IR on
Video Output	1-channel BNC HDCVI high definition video output & CVBS standard definition video output SD Tester out
Camera Features	
Max. IR LEDs Length	50m, Smart IR
Day/Night	Auto(ICR) / Color / B/W
Noise Reduction	2D/3D
OSD Menu	Support
Lens	
Focal Length	2.7~12mm
Angle of View	H: 95° ~36°
Lens Type	Motorized / Auto Iris
Mount Type	Φ14
Auxiliary Functions	
Alarm	1 channel in/out
Audio	1 channel in
Heater	Optional
General	
Power Supply	AC24V±25% / DC12V±25%
Power Consumption	Max 12.5W
Working Environment	-30°C~+60°C / Less than 95%RH (no condensation)
Transmission Distance	Over 500m via 75-3 coaxial cable
Ingress Protection	IP67, IK10
Dimensions	Φ159mm×117.9mm
Weight	0.9kg
Material	Metal

DH-HAC-HDBW32A1E-Z

Dimensions (mm)

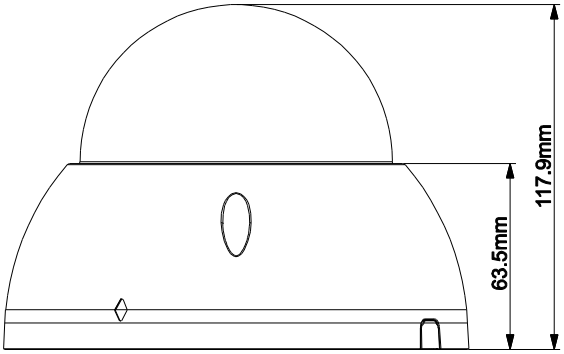

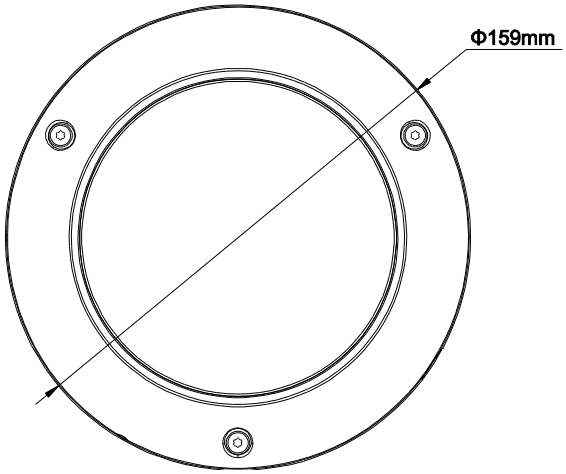

Accessory (optional)

		
PFA138	PFB201C	PFA101

			
PFB302S	PFB300C	PFA150	PFA151