WKIO 3P24 PEL

12NC: 859991009420

GTIN (EAN) code: 8003437204050

Whirlpool
SENSING THE DIFFERENCE



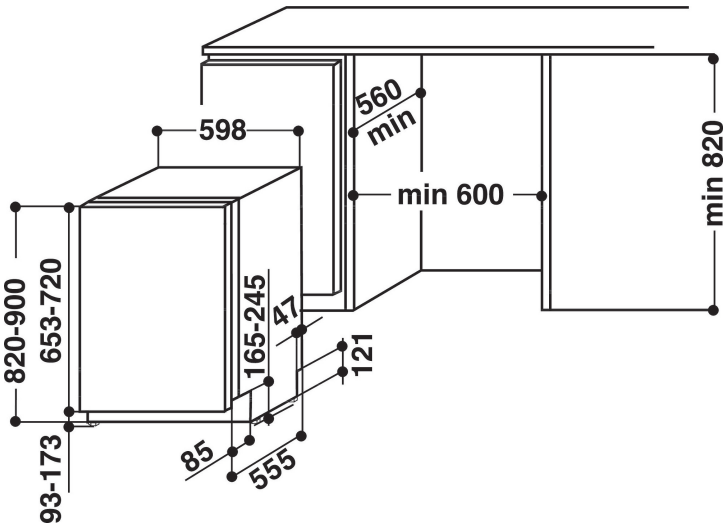

- Installation Type: Built-in
- Energy class A++
- 15 place settings
- 6TH Sense Technology
- Noise level: 43 dB(A)
- 11 L per cycle (3080 L per year)
- PowerCleanPro
- PowerCleanPRO
- Third rack: Yes, flexible + handle inox
- Autoclean filter
- Start delay 1-12 h
- Silent
- FlexiSpace
- Adjustable upper rack
- Multizone
- Tablet
- Hygenic+

Whirlpool integrated dishwasher: inox color, full size - WKIO 3P24 PEL

This Whirlpool integrated Dishwasher features: inox color. Outstanding A++ energy rating, for reduced energy consumption. Adjustable feet, for perfect stability on uneven floors and surfaces. Convenient digital countdown timer, to inform you when the washing cycle is complete. Innovative technology ensuring extra silent performance, for a very quiet appliance.

Modular Third rack
The third rack is perfect for accommodating cutlery and utensils and is equipped with sliding modules that allow to easily load higher items on the upper rack.

Single rack washing option
Outstanding water efficiency. The single rack option allows you to wash a small number of dishes without having to wait to fill your Dishwasher. Enjoy perfect results and low water consumption.

Start Delay
Tailored for you. The Start Delay option allows you to set the Dishwasher to begin its cycle whenever most convenient for you, saving you both time and energy.

15 Place Settings
Accommodate up to 15 place settings thanks to the modular third rack that ensures great flexibility with every loading combination.

Super Silent
Silent efficiency. This Whirlpool Dishwasher is designed to provide ideal results, while ensuring a silent noise output, so you can enjoy some extra peace and quiet.

6th Sense Power Clean
No prewash required. PowerClean technology provides perfect washing results with no pre-washing, soaking or scrubbing by hand.

Powerclean Pro
Powerful water jets on the rear of the machine work to deliver supreme cleaning results on the toughest soil. The intelligent sensors detect the level of dirt and adapt the water pressure accordingly.

Upper rack removability
Removable upper rack. Your Dishwasher's removable upper rack allows you to create extra space when needed, as well as fit unusually-shaped items, effortlessly.

WKIO 3P24 PEL

12NC: 859991009420

GTIN (EAN) code: 8003437204050

Whirlpool
SENSING THE DIFFERENCE

MAIN FEATURES

Construction type	Built-in
Installation type	Full-integrated
Type of control	Electronic
Type of control settings	-
Removable work top	N/A
Door decor panel	N/A
Main colour of product	Inox
Electrical connection rating (W)	1900
Current (A)	10
Voltage (V)	220-240
Frequency (Hz)	50
Length of Electrical Supply Cord (cm)	130
Plug type	Schuko
Length inlet hose (cm)	155
Length outlet hose (cm)	150
Adjustable plinth	No
Height of removable worktop (mm)	0
Adjustable feet	Yes - all from front
Height of the product	820
Width of the product	595
Depth of the product	555
Depth with open door 90 degree (mm)	-
Minimum niche height	820
Maximum niche height	900
Minimum niche width	600
Maximum niche width	600
Niche depth	570
Net weight (kg)	35.5
Gross weight (kg)	37.5

TECHNICAL FEATURES

Automatic programmes	Yes
Maximum temperature for water intake (°C)	60
Start delay options	Continuous
Start delay time max. (h)	12
Progress indicator	-
Digital countdown indicator	Yes
Salt light indicator	Yes
Rinse aid light indicator	Yes
Safety device	N/A
Adjustable upper basket	Yes
Largest loadable dish upper basket (cm)	0
Largest loadable dish lower basket (cm)	0
Number of place settings	15

PERFORMANCES

Energy efficiency class - NEW (2010/30/EU)	A++
Energy consumption annual (kWh/annum) - NEW (2010/30/EU)	271
Duration of the left-on mode - NEW (2010/30/EU)	12
Power consumption in left-on mode - NEW (2010/30/EU)	6
Power consumption in off-mode - NEW (2010/30/EU)	0.5
Water consumption annual (l/annum) - NEW (2010/30/EU)	3080
Noise level (dB(A) re 1 pW)	43

