

Universal Projector Wall or Ceiling Mount

Holds up to 20 kg/44 lbs; adjustable height, tilt and swivel; silver
Part No.: 461191

Easily put a projector in place and keep it in prime position.

Manhattan Universal Projector Ceiling Mounts hold projectors stable and steady with precise tilt, swivel and height adjustments.
Constructed of lightweight, quality materials, Manhattan Universal Projector Ceiling or Wall Mounts fit a range of models with a secure, confident and balanced overhead or wall installation. In some cases, their internal cable management helps conceal unsightly cords and connections for a professional, finished appearance.

Ideal for home theater, auditorium, office, retail, classroom, video conferencing and other commercial applications, Manhattan Universal Projector Ceiling Mounts help focus attention where it matters most.

Features:

- Securely holds most projectors up to 20kg/44lbs
- Optimize views with -15° ~ 15° tilt, -8° ~ 8° swivel
- Multi-purpose design for mounting to wall or ceiling
- Easy installation ideal for home, office and commercial applications
- Lifetime Warranty

Specifications:

Universal Projector Wall or Ceiling Mount
• Suitable for standard or short-throw projectors
• Weight capacity: up to 20 kg/44 lbs

For more information on Manhattan products, consult your local dealer or visit www.manhattan-products.com.
All names of products or services mentioned herein are trademarks or registered trademarks of their respective owners. Distribution and reproduction of this document, and use and disclosure of the contents herein, are prohibited unless specifically authorized.

- Adjustable support arms for projectors of different sizes
- Extension rod: adjusts 43 - 65 cm (16.9 to 25.6 in.)

Package Contents
- Universal Projector Wall and Ceiling Mount
- Installation hardware with instructions



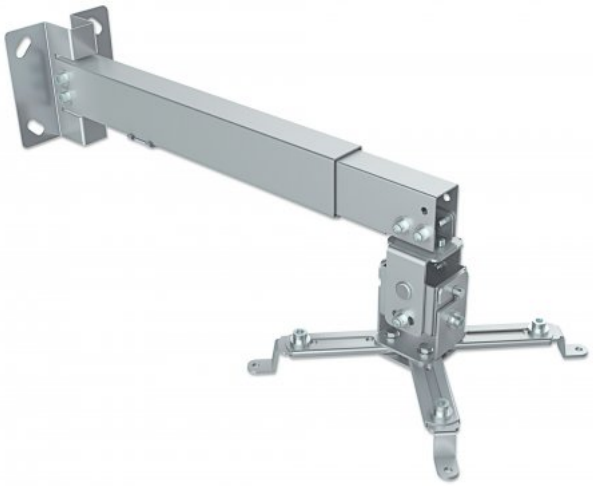

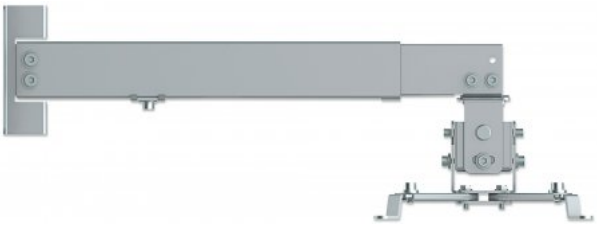

For more information on Manhattan products, consult your local dealer or visit www.manhattan-products.com.
All names of products or services mentioned herein are trademarks or registered trademarks of their respective owners. Distribution and reproduction of this document, and use and disclosure of the contents herein, are prohibited unless specifically authorized.